BitScope Edge Cluster 8

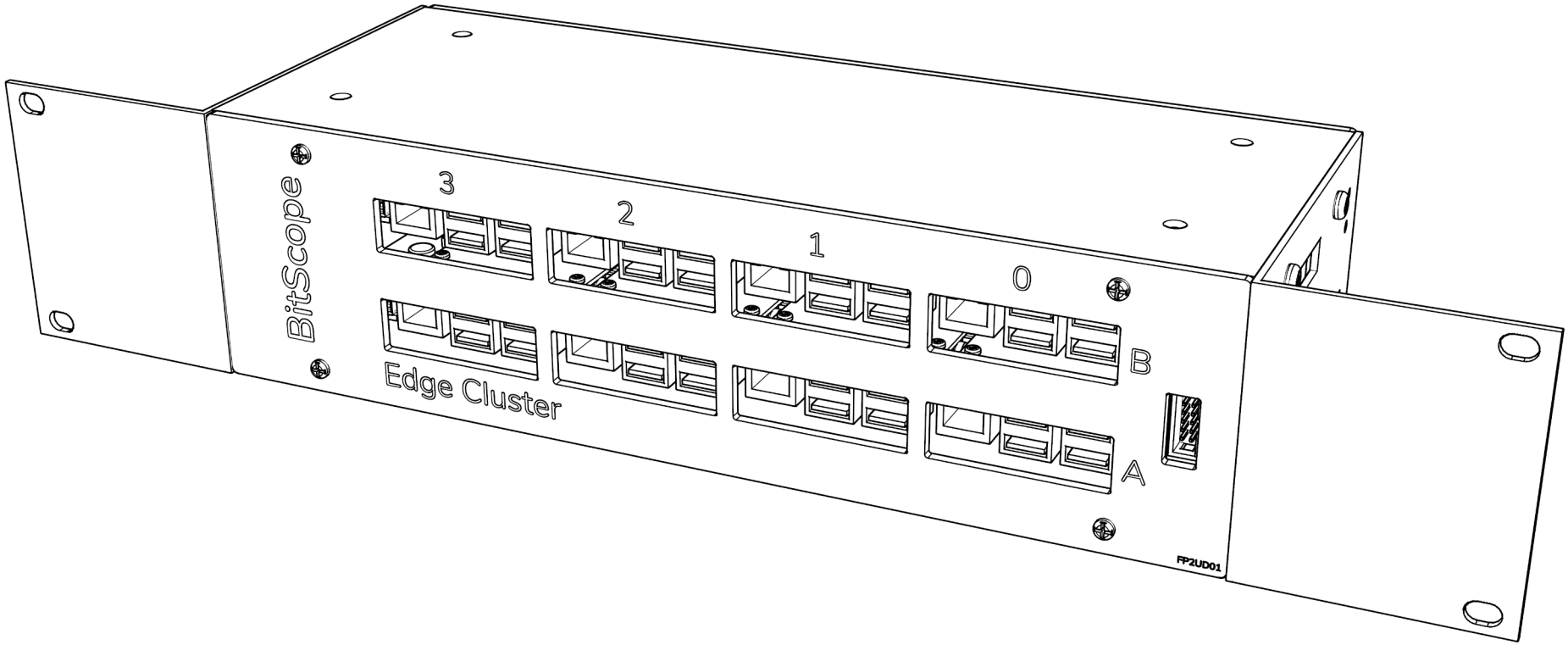

Product Assembly Guide

EC08A01-MCH3R59R-01-xk56y2l69w4eh5t4

COMPONENTS

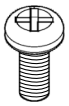
M4 10mm x 8


M3 6mm x 20


M3 10mm x 8


M3 CSK x 4


M3 Washer x 20

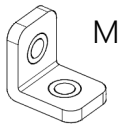
M3 Bracket x 12

RACK FAN KIT

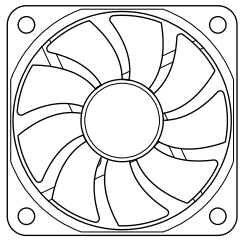
Fan 60mm x 2


M3 15mm x 8


M3 Nut x 8

may include fan guard

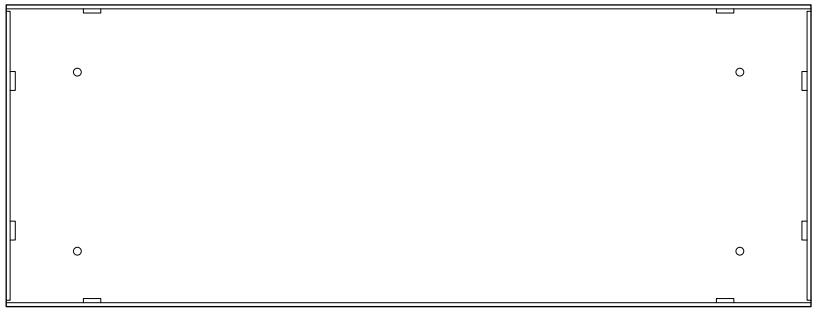
Tray x 2

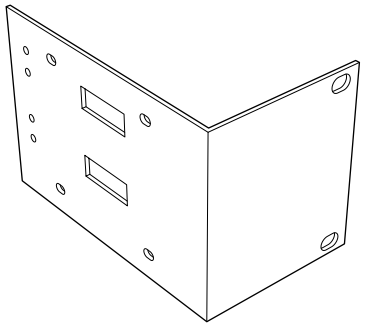
Ears x 2

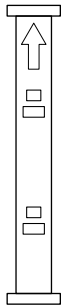
Blade Support Bracket x1

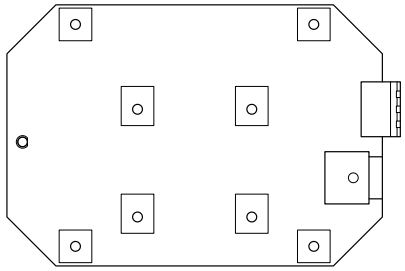
Power Plate x 1

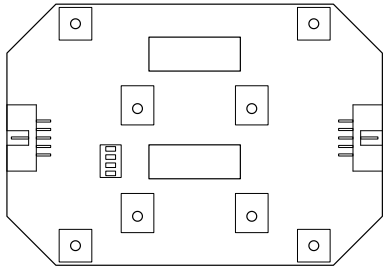
Ground/Bus Plate x 1

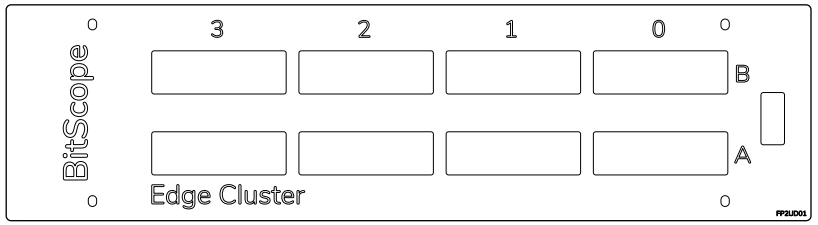

Front Panel x 1

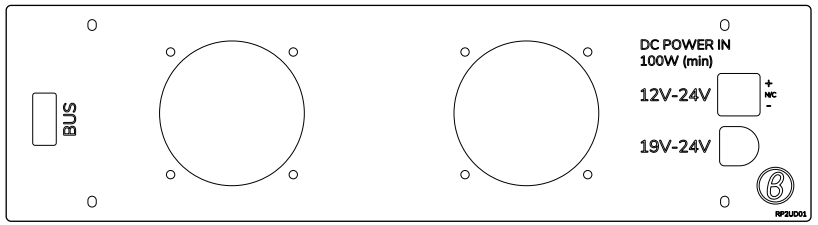

Back Panel x 1

Raspberry Pi x 8

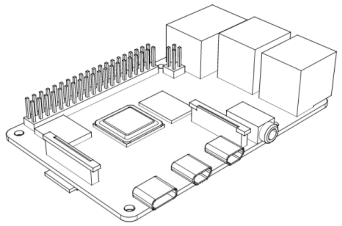
may be supplied seperately

Cluster Blade Kit x 2


M2.5 x 32

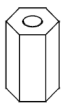
M2.5 10mm Standoff x 16

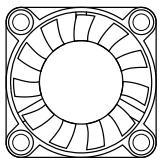
Fan x 4


M2.5 10mm x 16


M2.5 Nut x 16

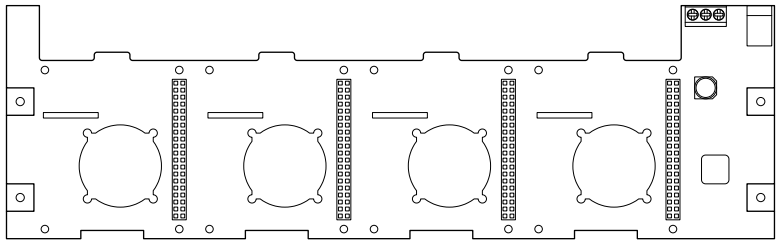
may be pre-assembled

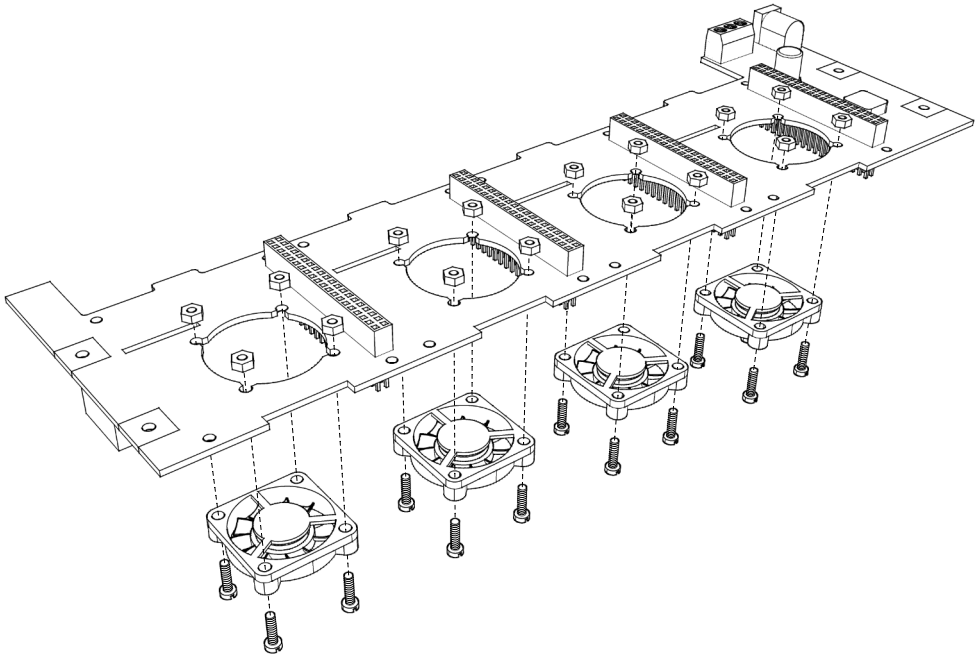

FAN KIT PARTS

- M2.5 10mm x 16
- M2.5 Nut x 16

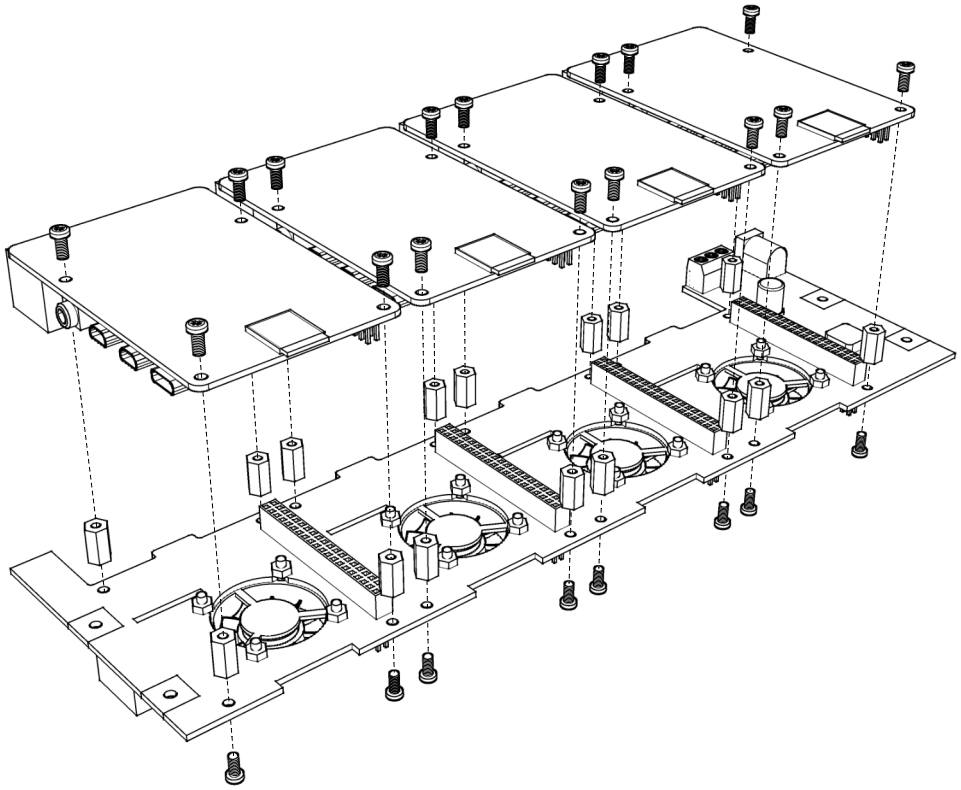

PI KIT PARTS

- M2.5 x 32
- M2.5 Standoff x 16

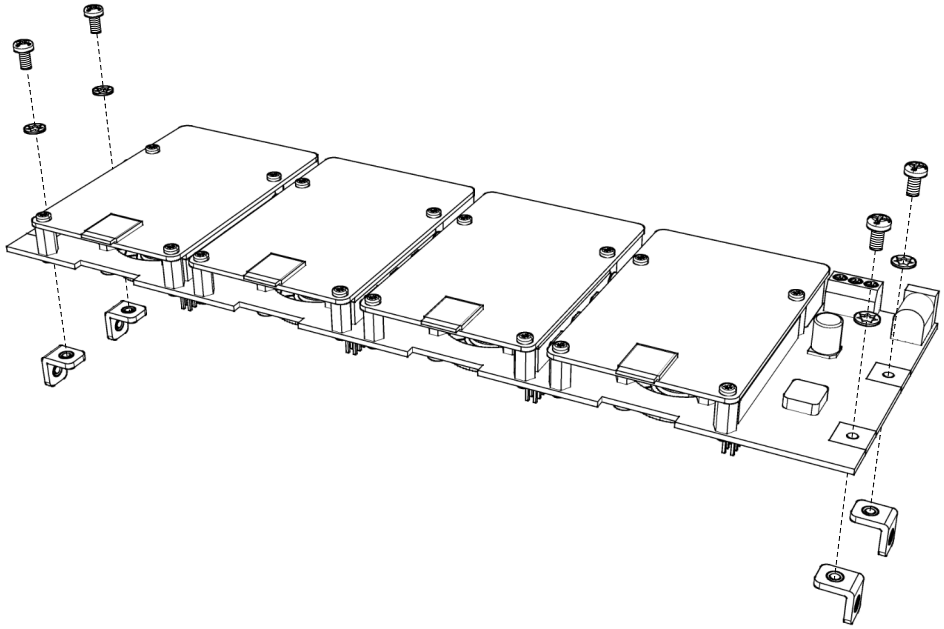

M3 6mm x 4

M3 Washer x 4

3

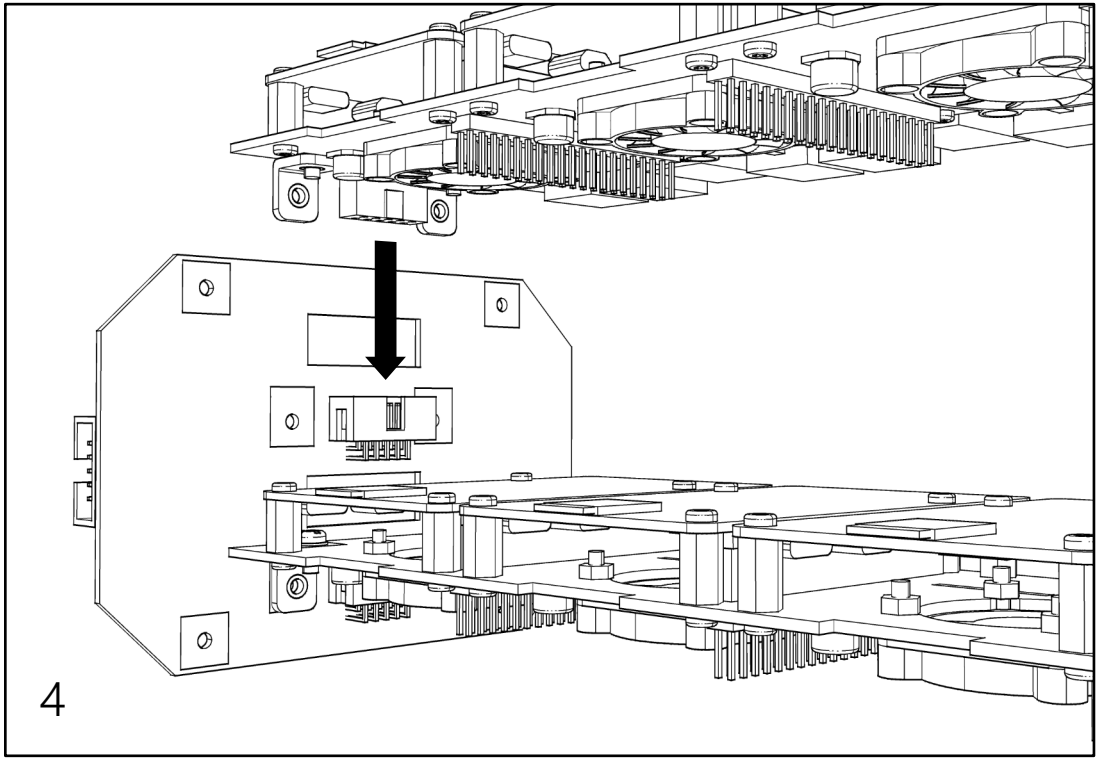

4

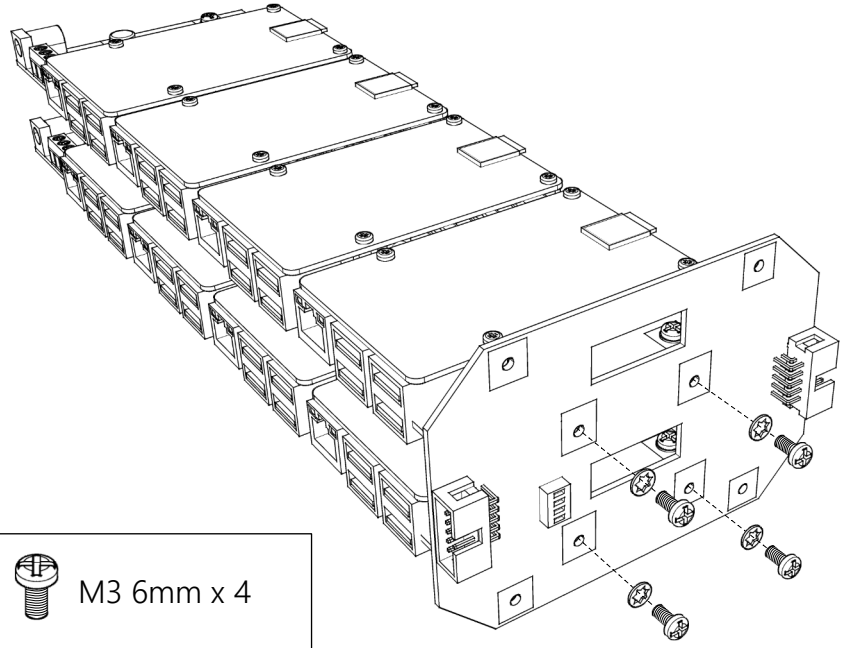

M3 6mm x 4

M3 Washer x 4

5

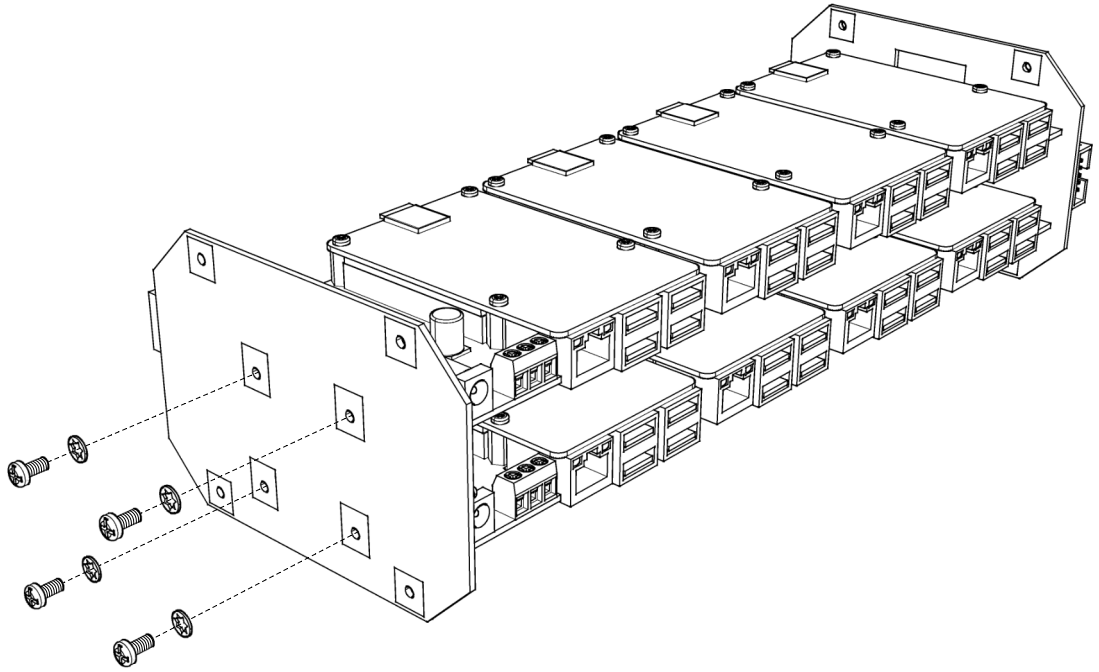

M3 6mm x 4

M3 Washer x 4

6

Cluster Pack Dip Switch Settings

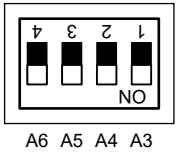

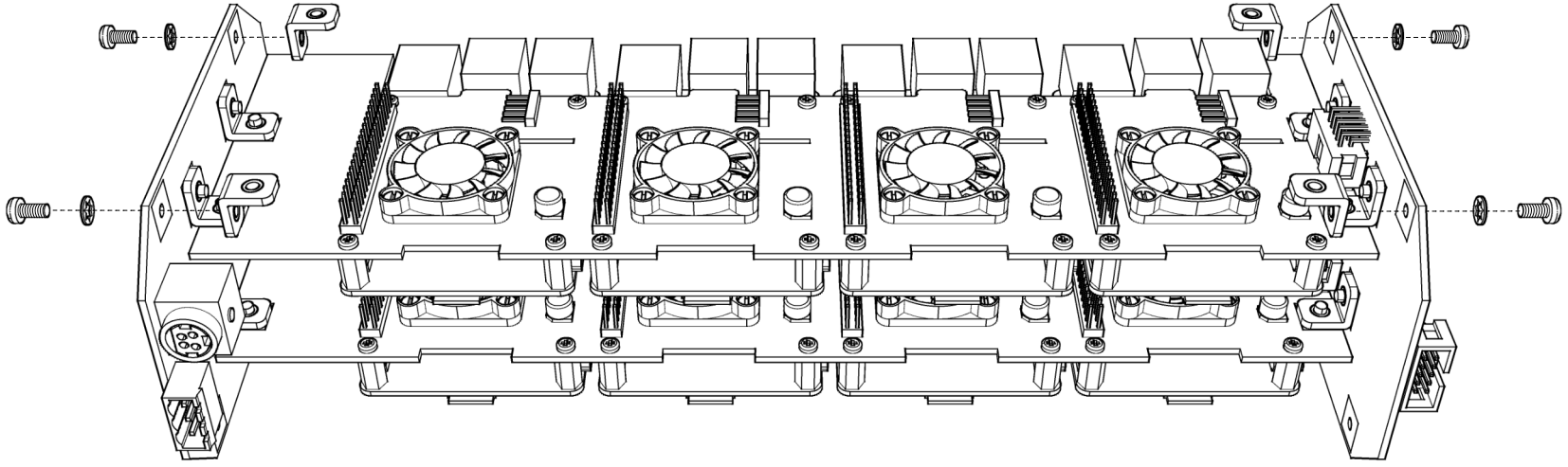

M3 6mm x 4

M3 Washer x 4

7

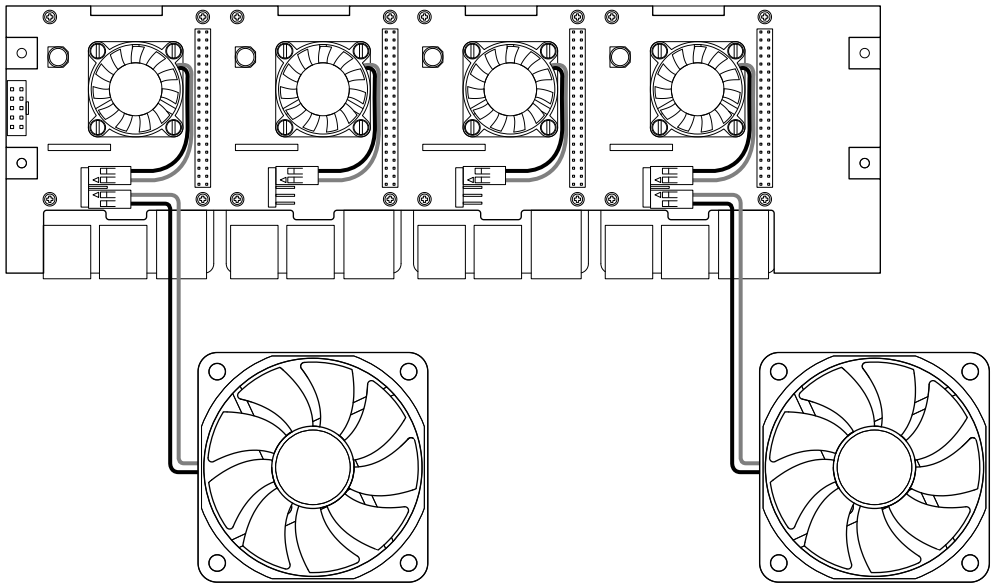

Connect external fans to different blades before the next step

8

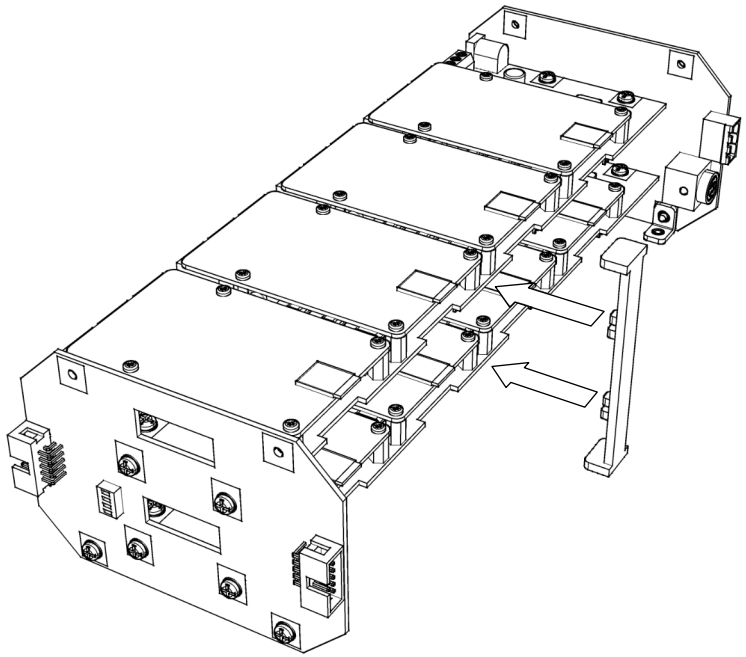

9

M3 CSK x 4

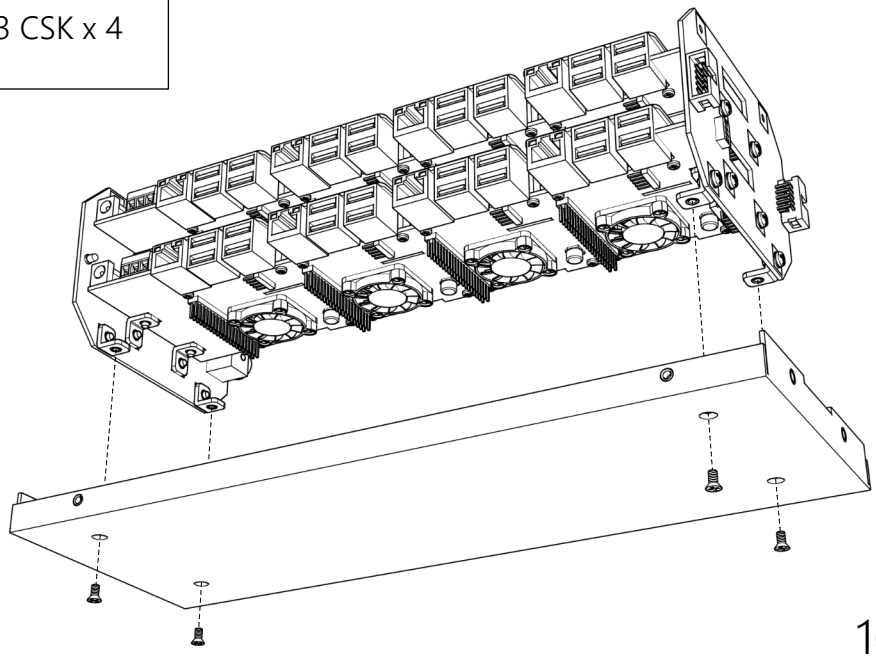

10

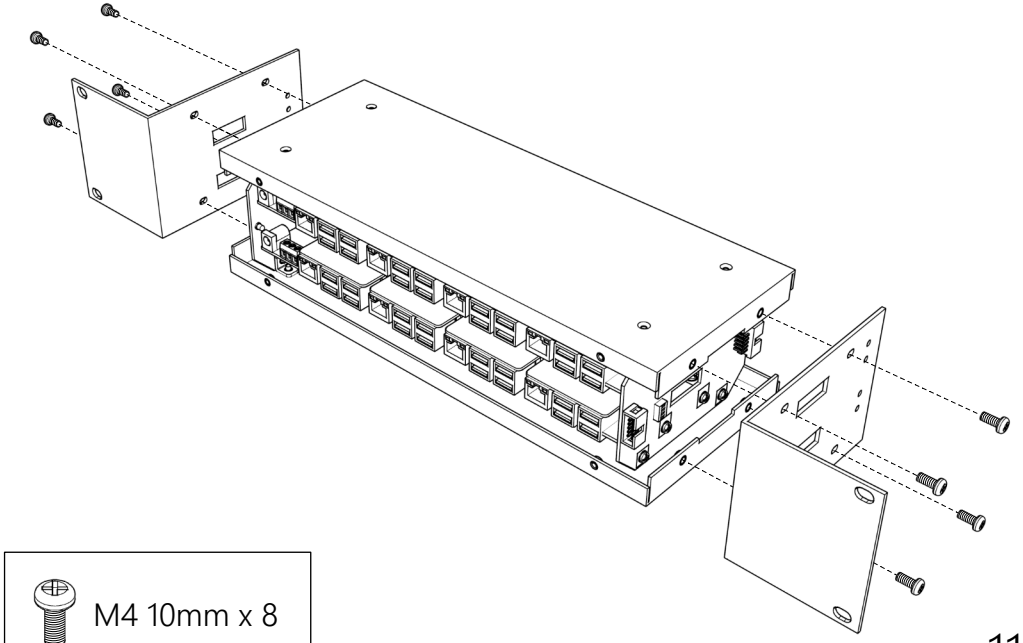

M4 10mm x 8

11

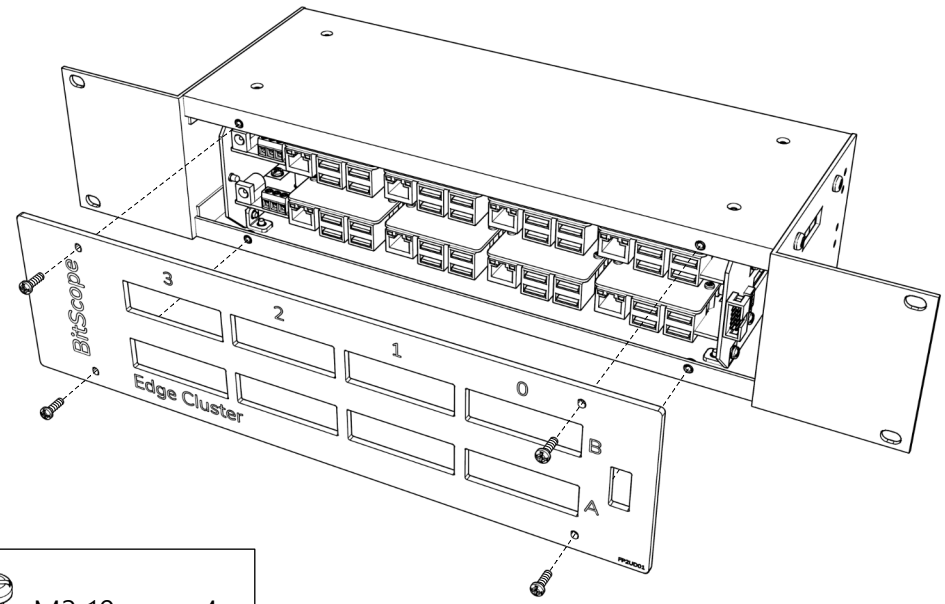

M3 10mm x 4

12

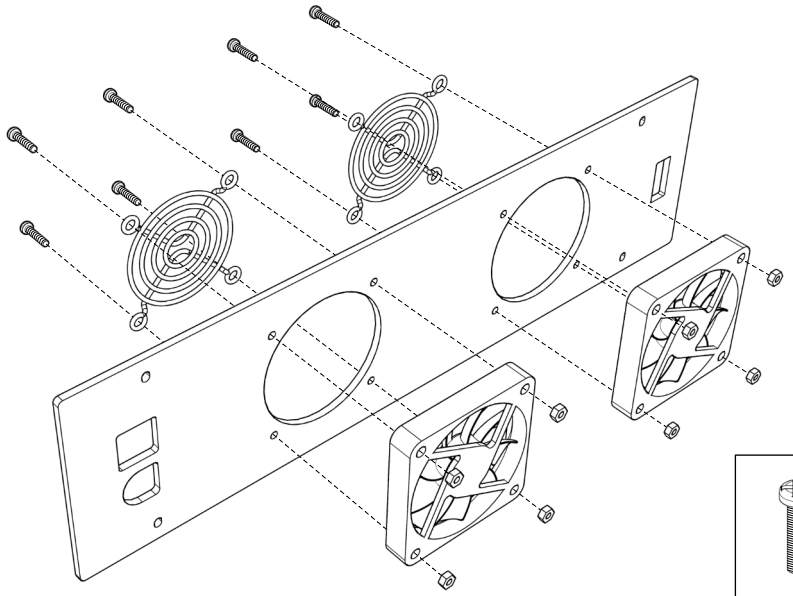

M3 15mm x 8

M3 Nut x 8

13

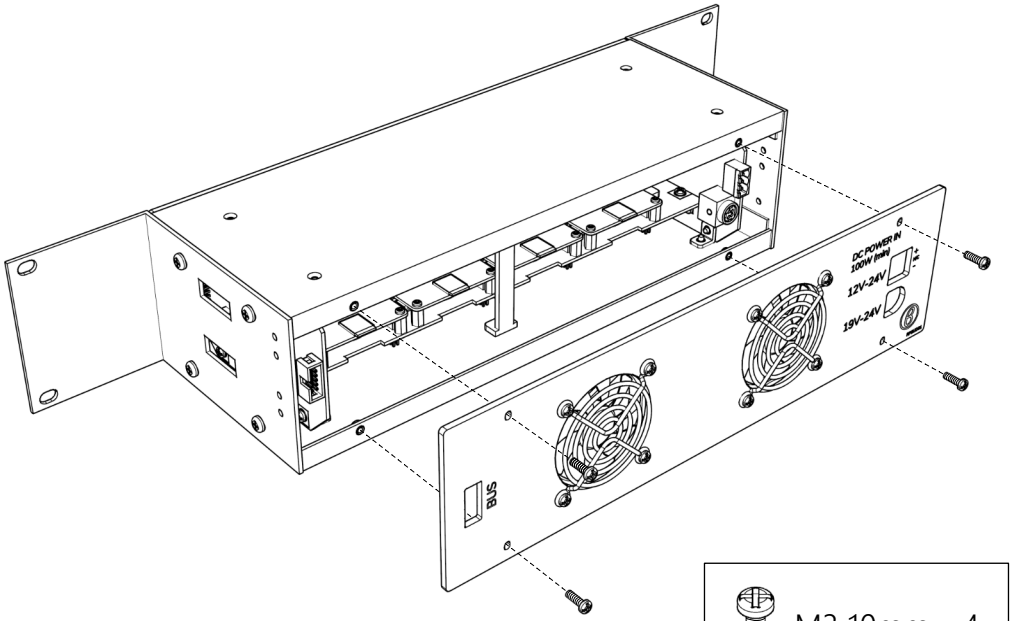

M3 10mm x 4

14

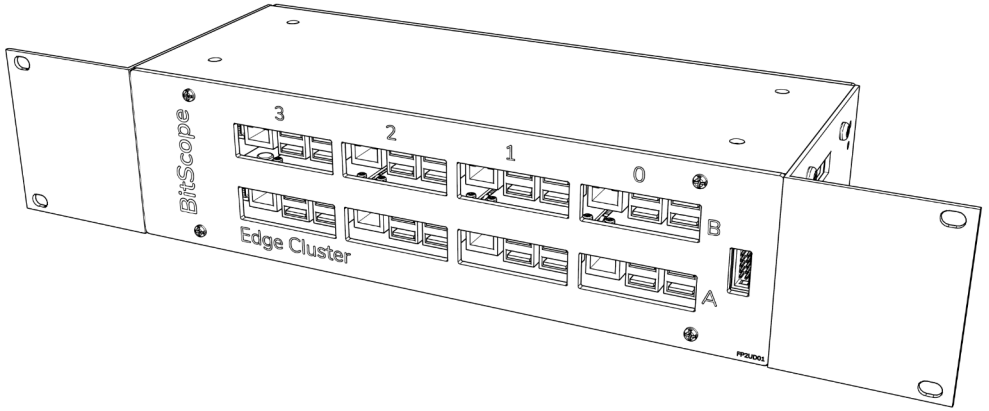

15

OPTION A DESK MOUNT
(or SHELF MOUNT)

COMPONENTS

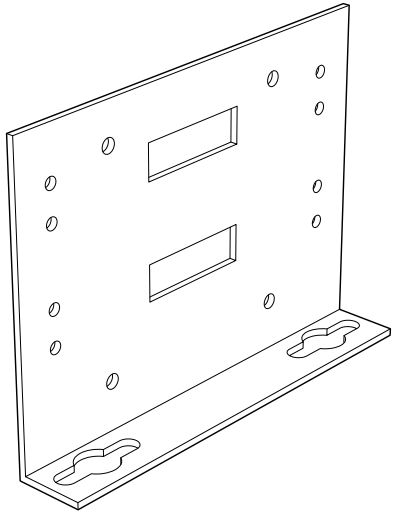

Side x 2

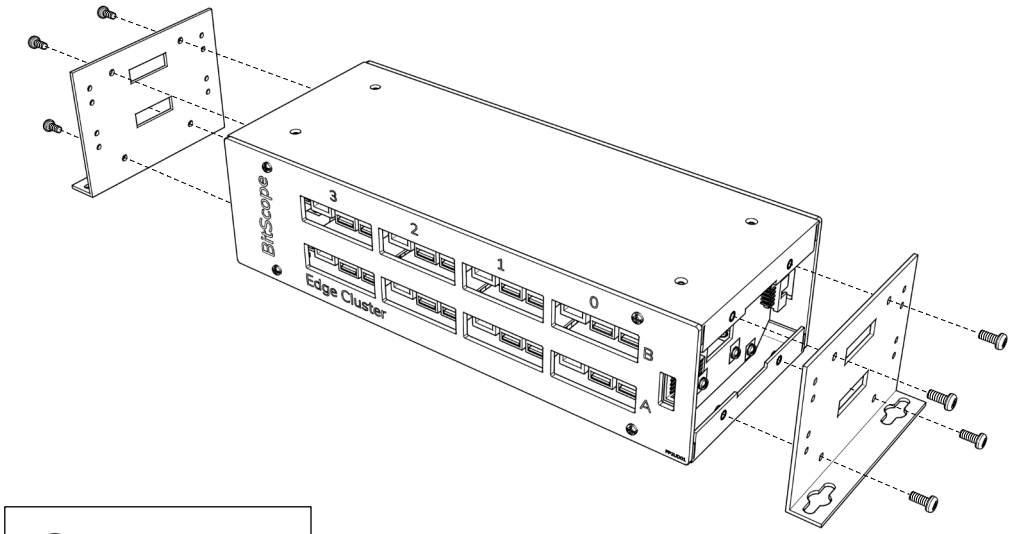



M4 10mm x 8

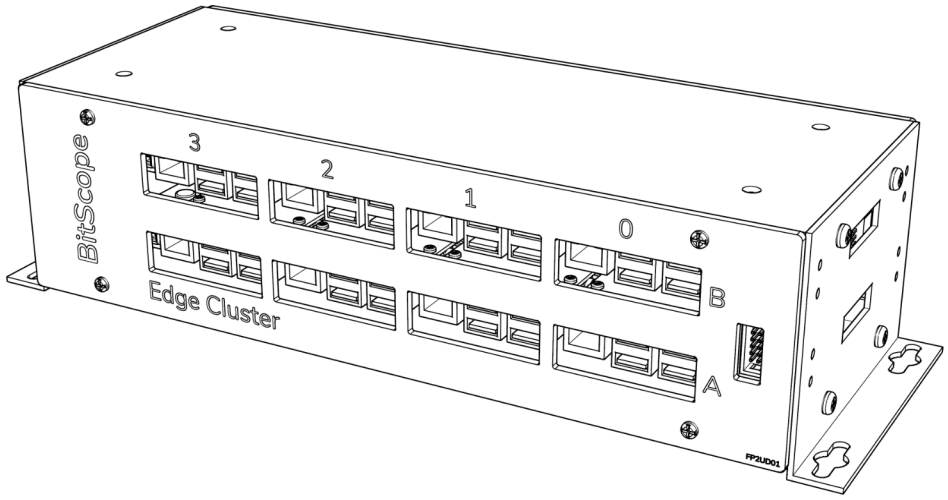

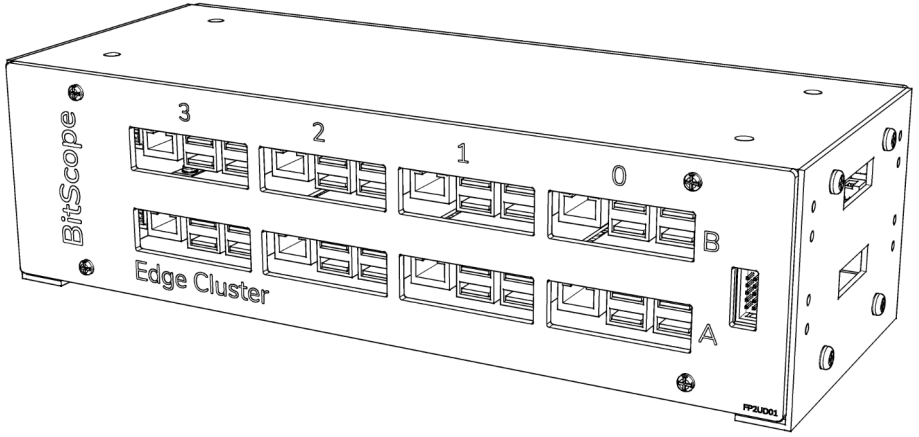

Sides may be reversed and feet applied for desktop use

OPTION B WALL MOUNT

(switch may be supplied seperately)

COMPONENTS

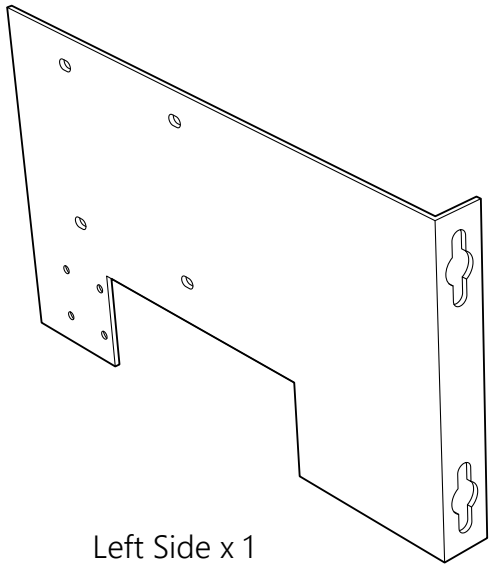

Left Side x 1

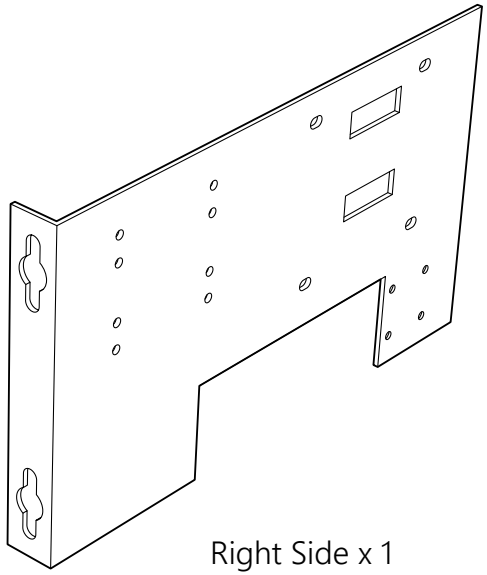

Right Side x 1

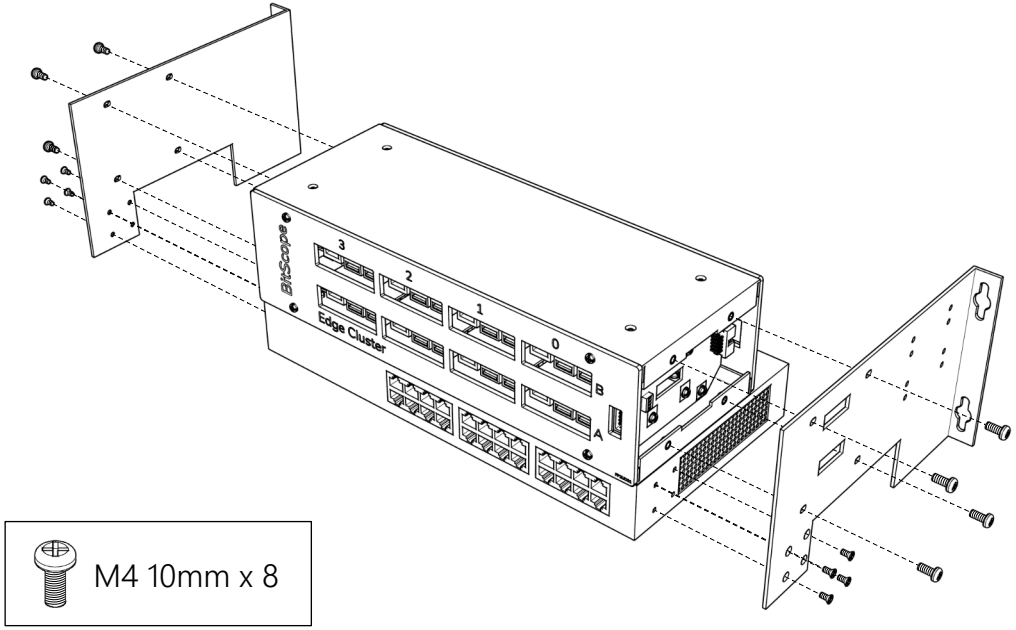

M4 10mm x 8

M3 CSK x 8
(included with the switch)

