BitScope Edge Cluster 12

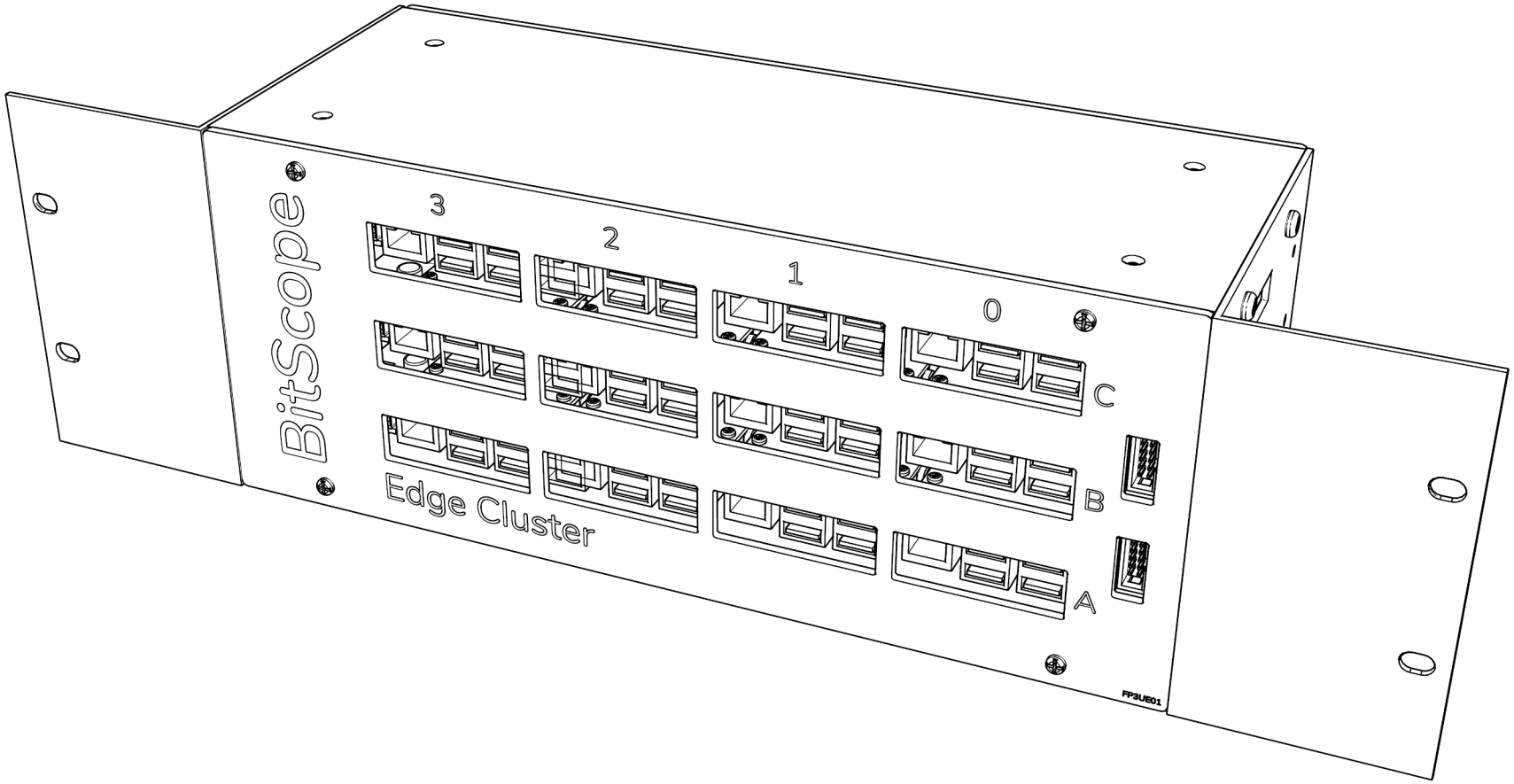

Product Assembly Guide

COMPONENTS

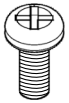
M4 10mm x 8


M3 6mm x 28


M3 10mm x 8


M3 CSK x 4


M3 Washer x 28

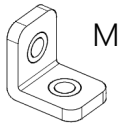
M3 Bracket x 16

RACK FAN KIT

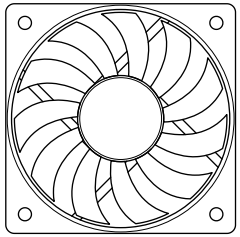

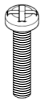
M3 15mm x 8


M3 Nut x 8

Fan 80mm x 2

may include fan guard

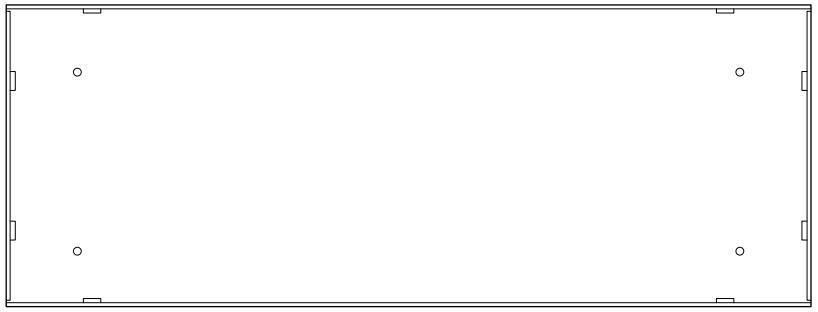
Tray x 2

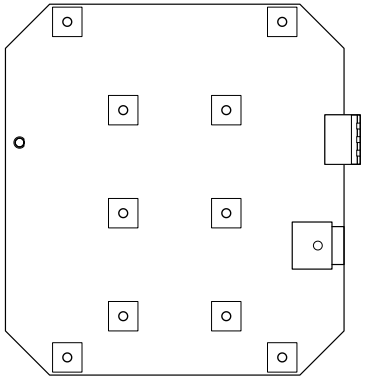
Power Plate x 1

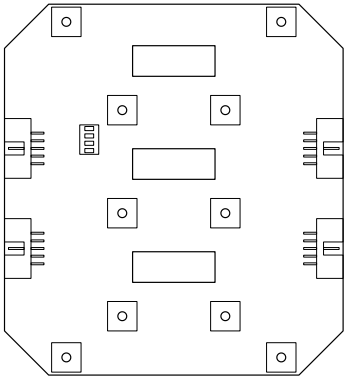
Ground/Bus Plate x 1

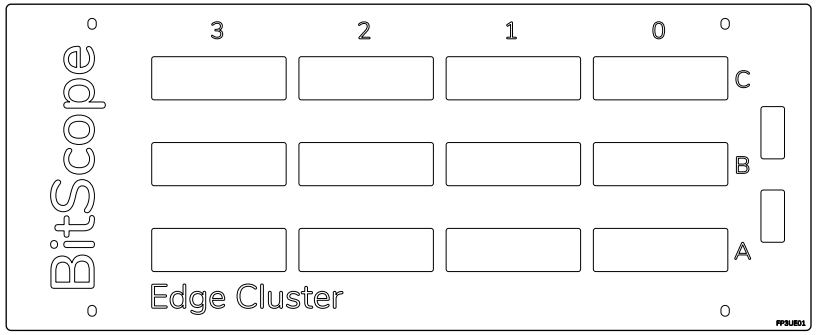

Front Panel x 1

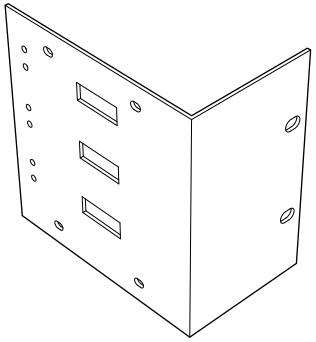
Ears x 2


Blade Support Bracket x1

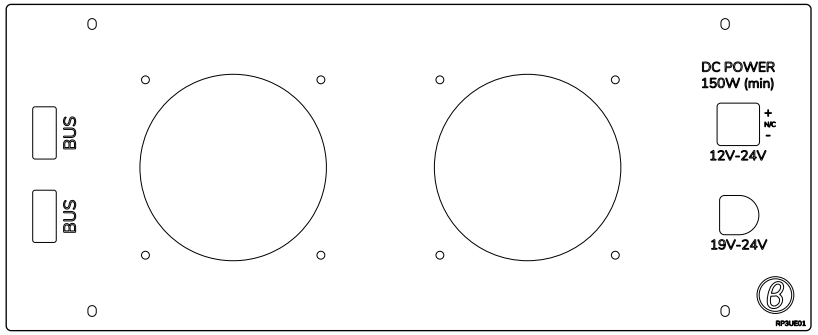

Back Panel x 1

Raspberry Pi x 12

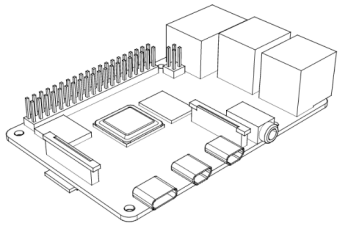

may be sold seperately

Cluster Blade Kit x 3


M2.5 x 32

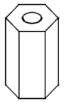
M2.5 10mm Standoff x 16

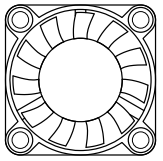
Fan x 4


M2.5 10mm x 16


M2.5 Nut x 16

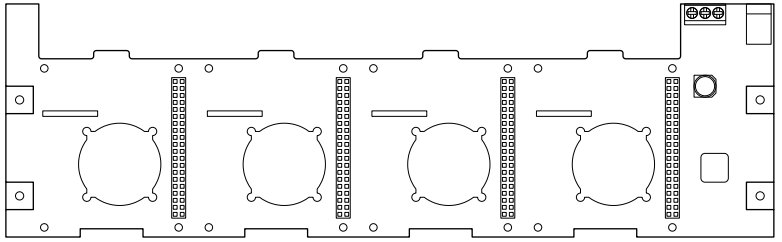

may be pre-assembled

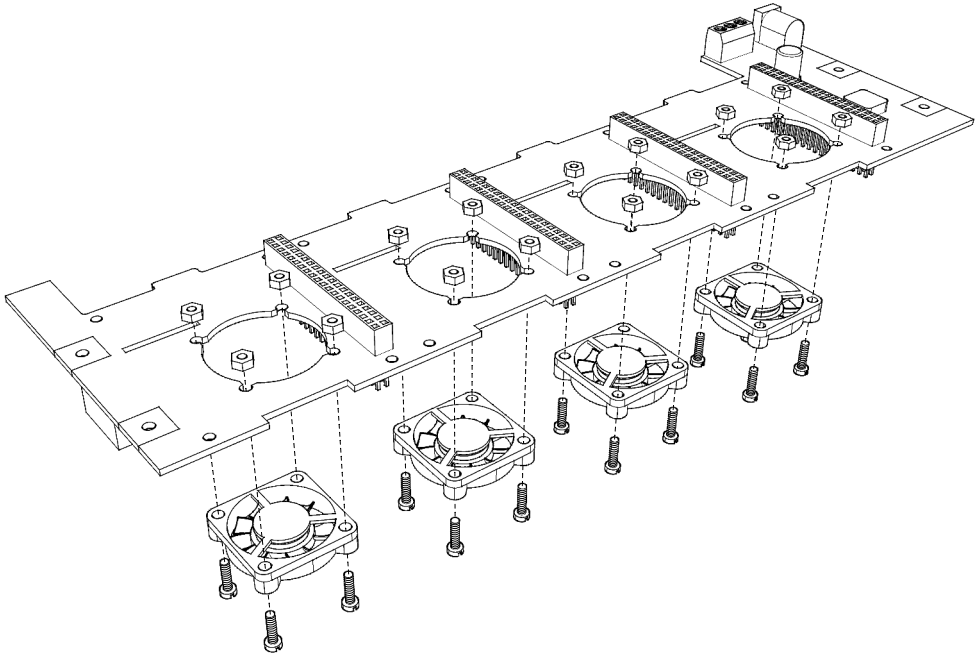

FAN KIT PARTS

- M2.5 10mm x 48
- M2.5 Nut x 48

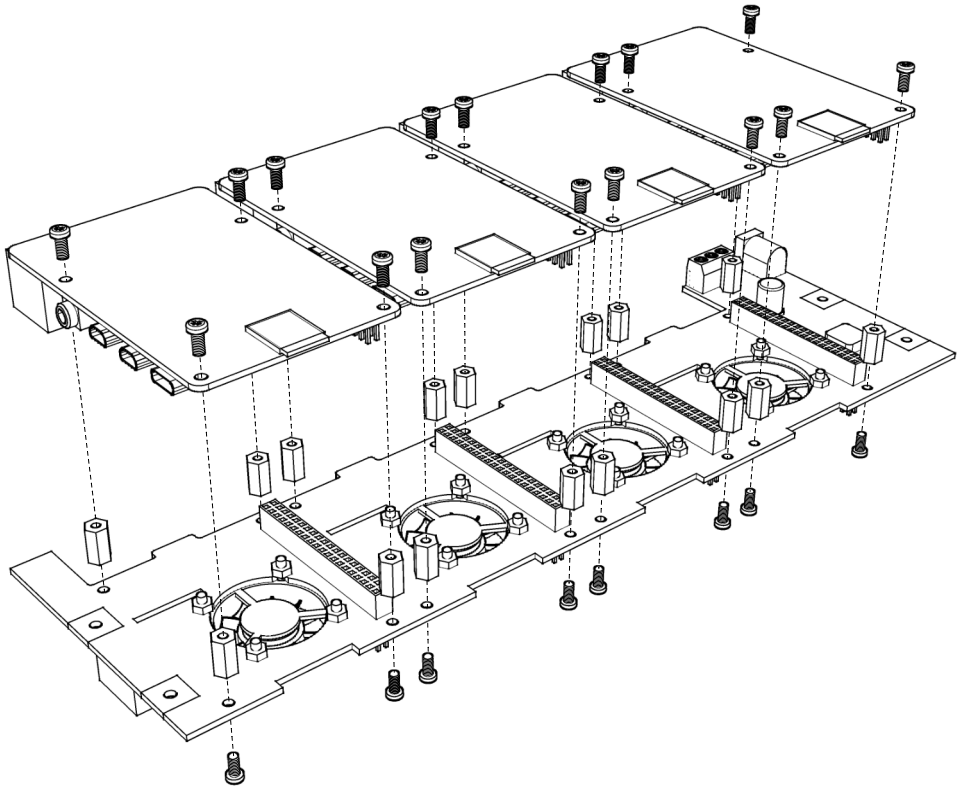

PI KIT PARTS

- M2.5 x 32
- M2.5 Standoff x 16

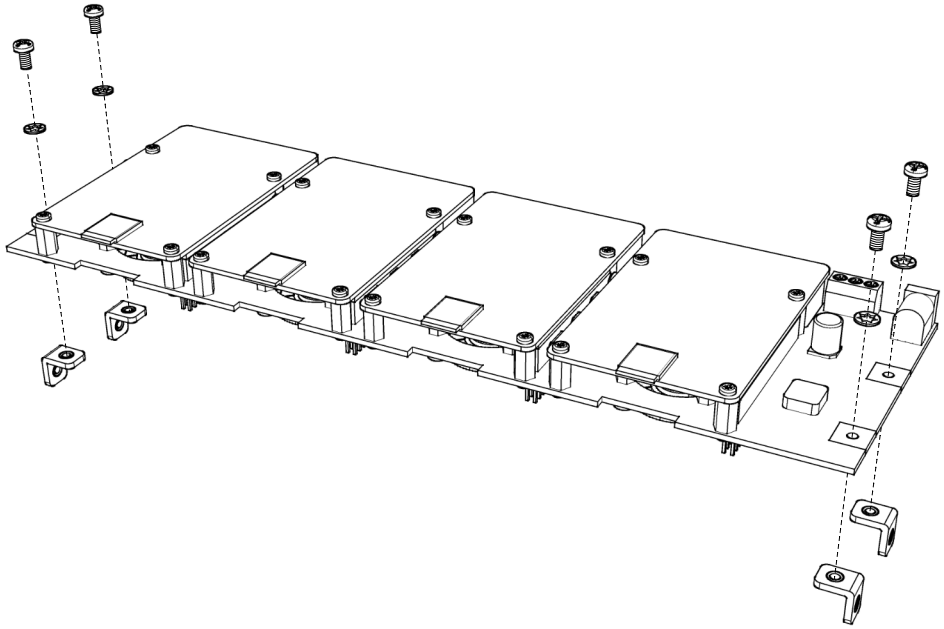

M3 6mm x 4

M3 Washer x 4

3

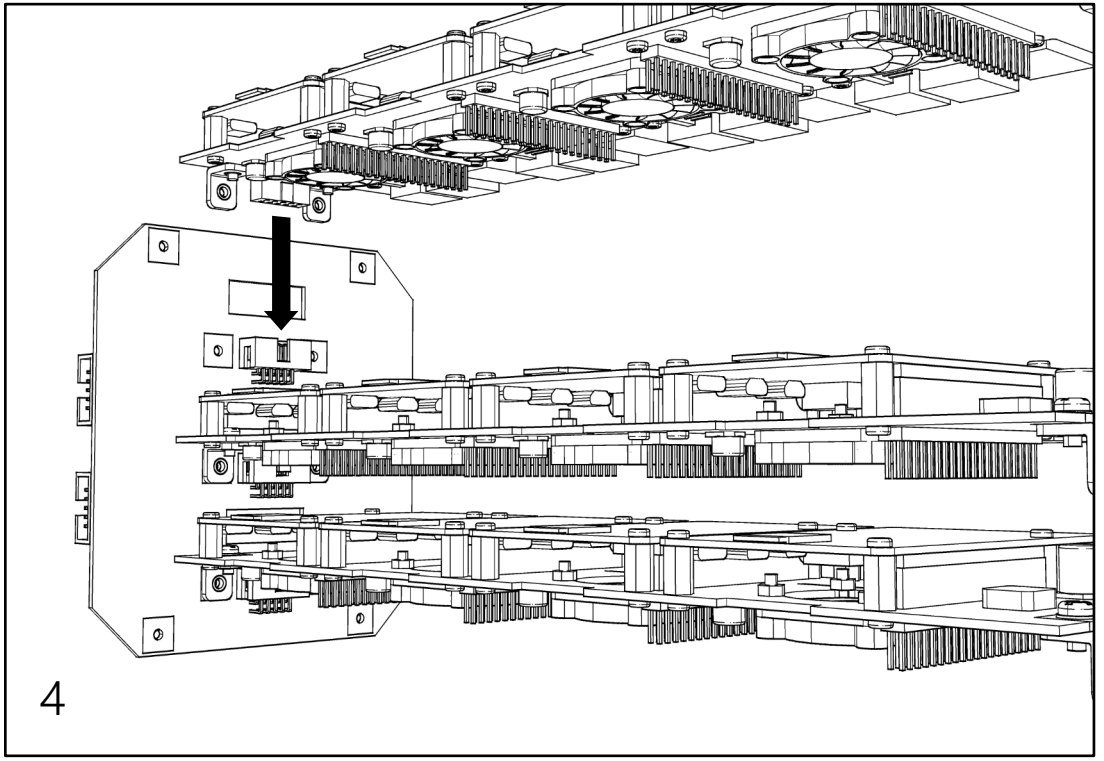

4

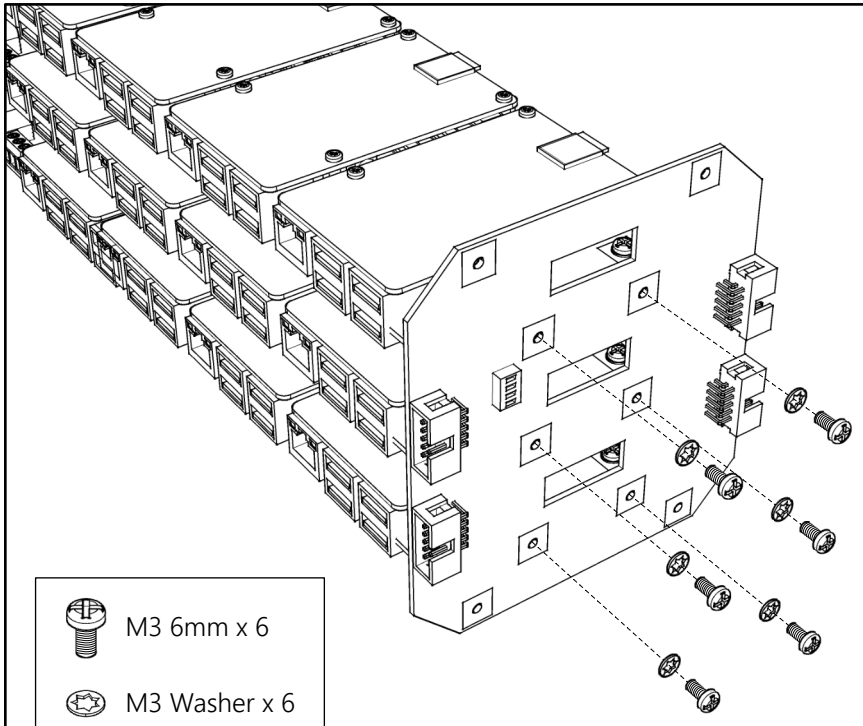

M3 6mm x 6

M3 Washer x 6

5

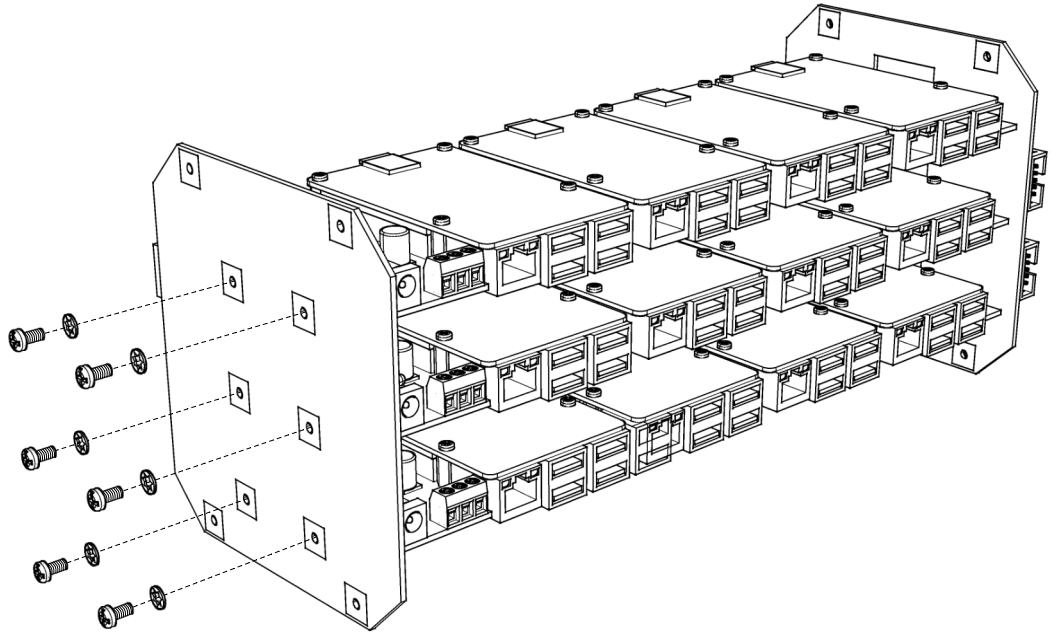

M3 6mm x 6

M3 Washer x 6

6

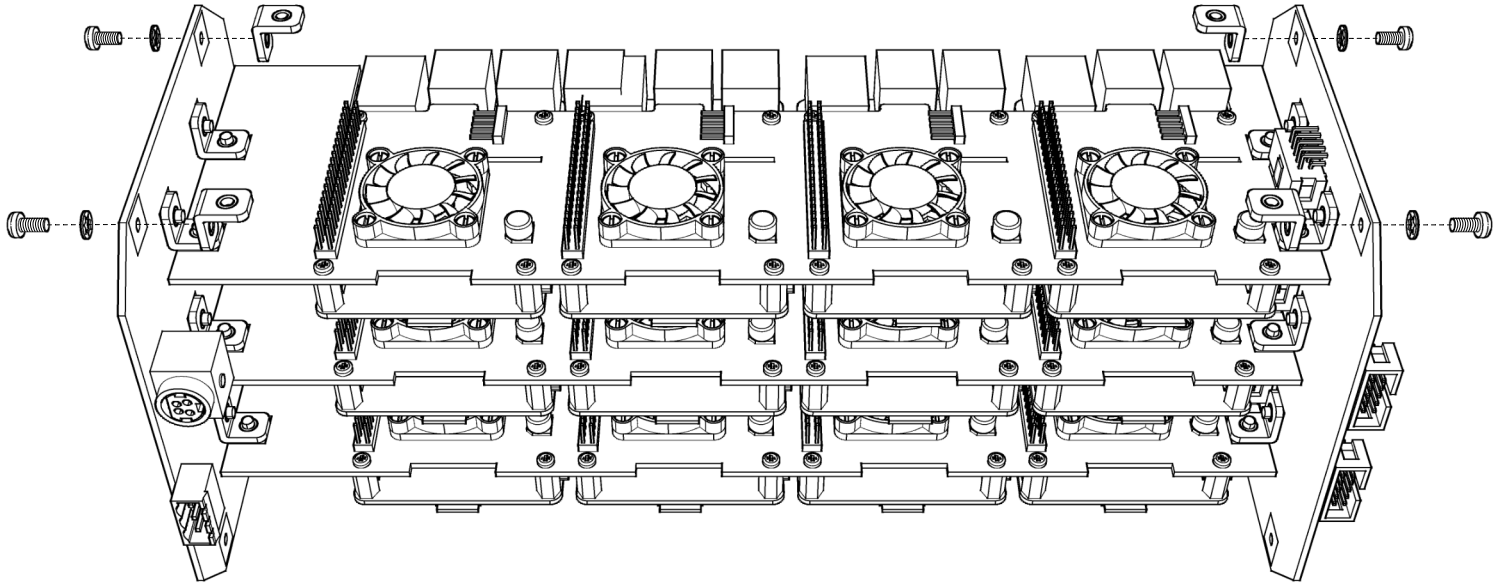

Cluster Pack Dip Switch Settings

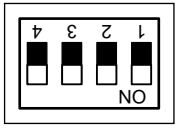

M3 6mm x 4

M3 Washer x 4

7

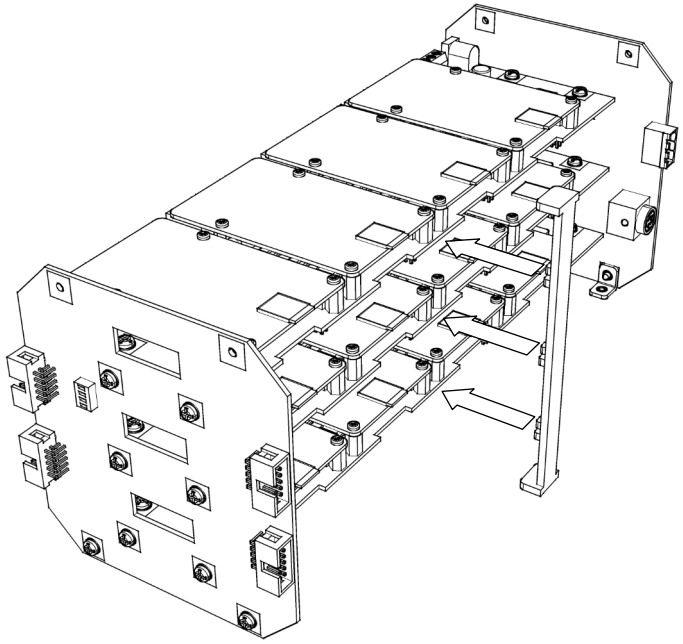

8

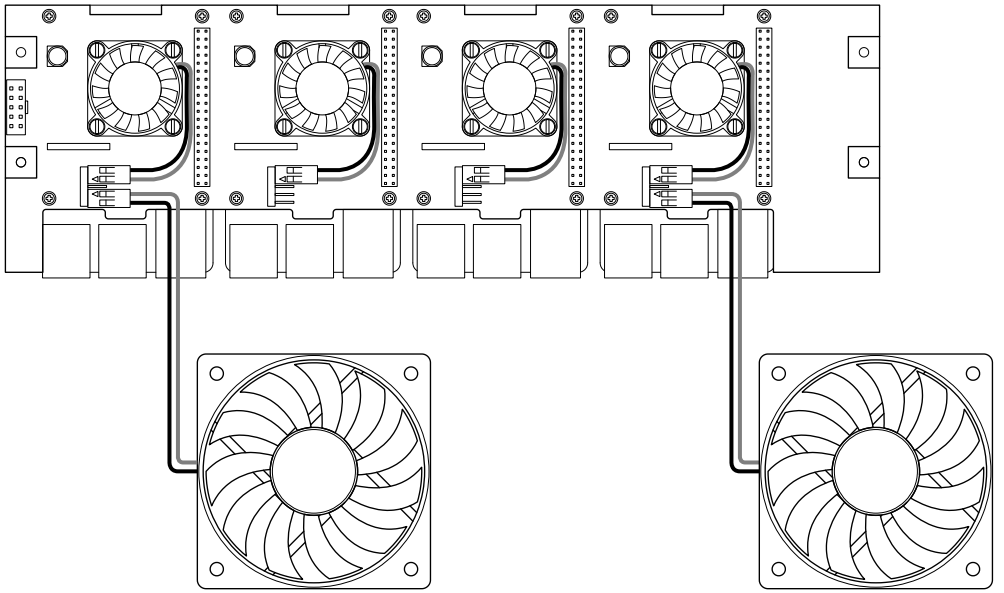

Connect external fans to different blades before next step

9

M3 CSK x 4

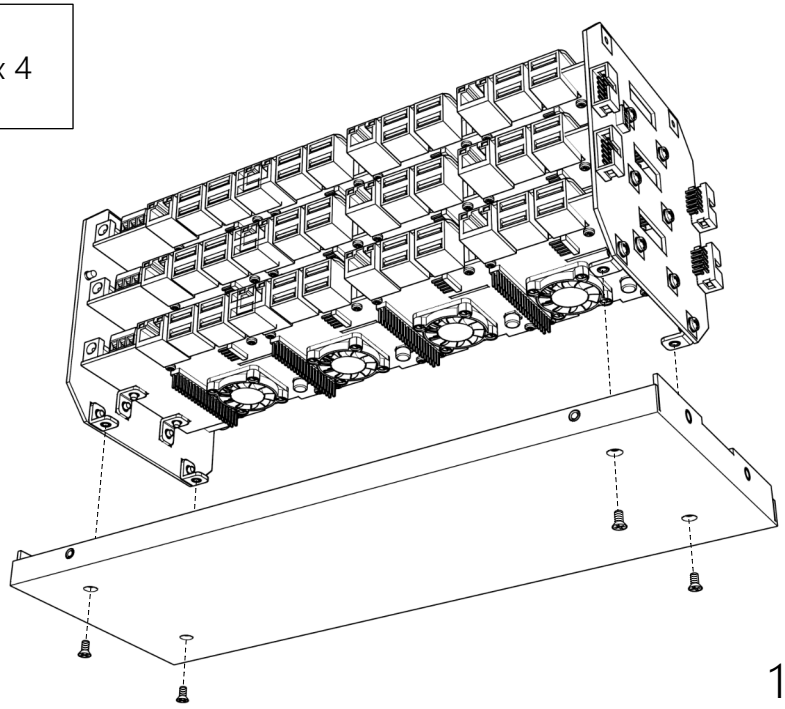

10

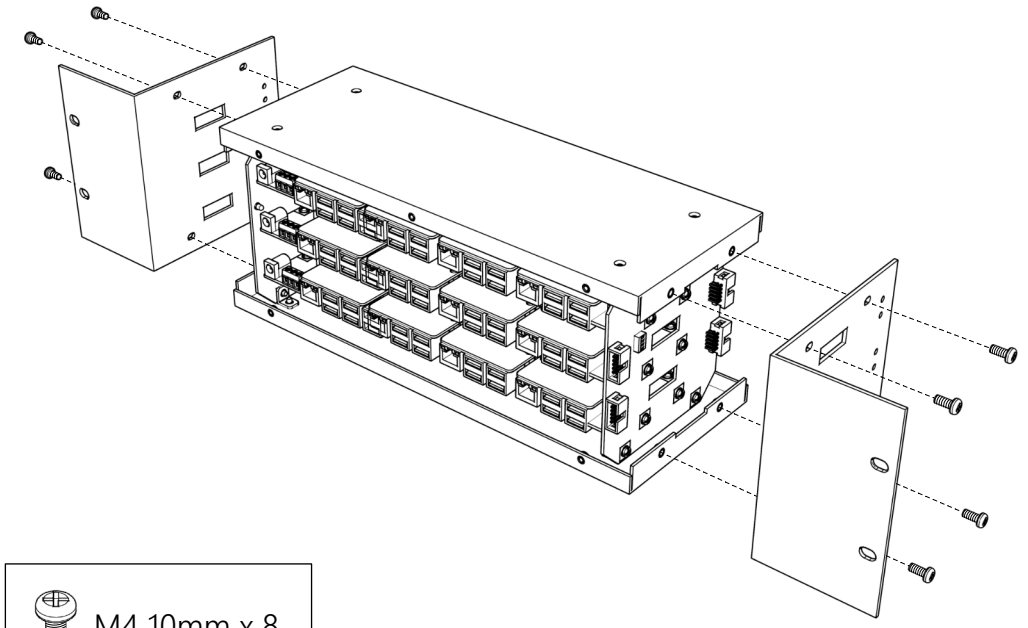

M4 10mm x 8

11

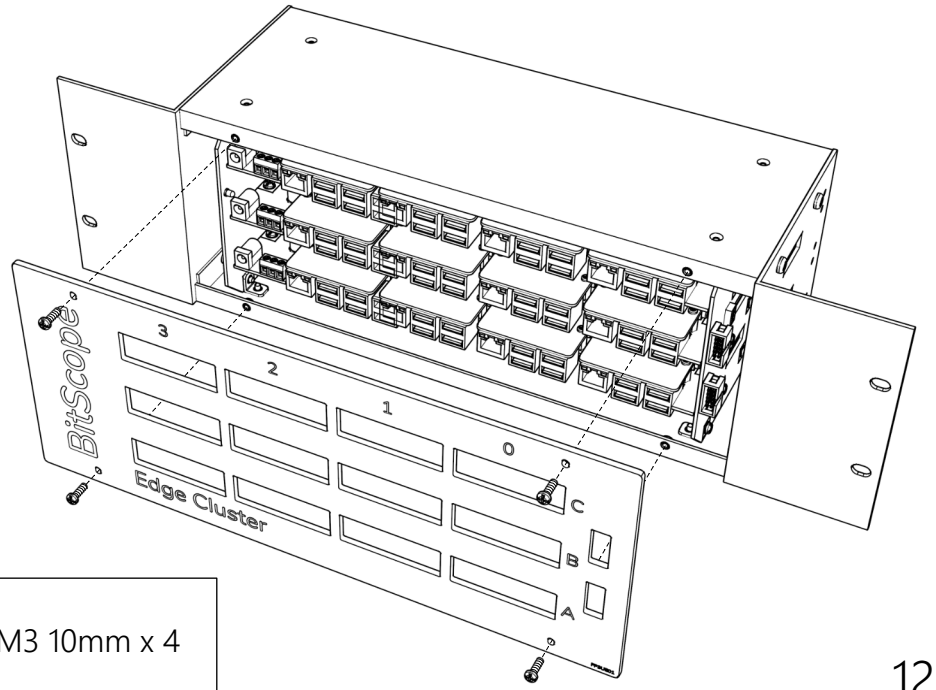

M3 10mm x 4

12

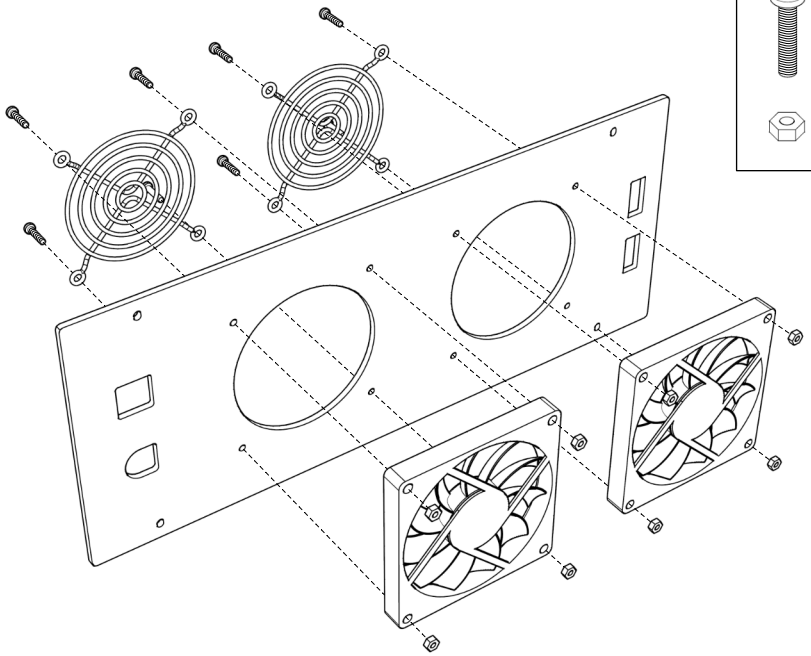

M3 15mm x 8

M3 Nut x 8

13

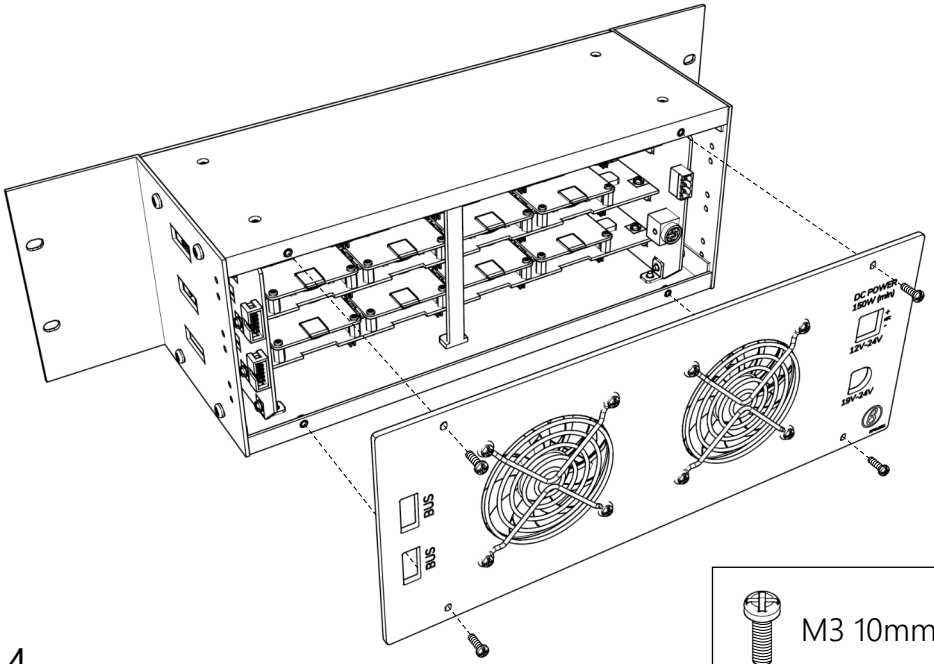

M3 10mm x 4

14

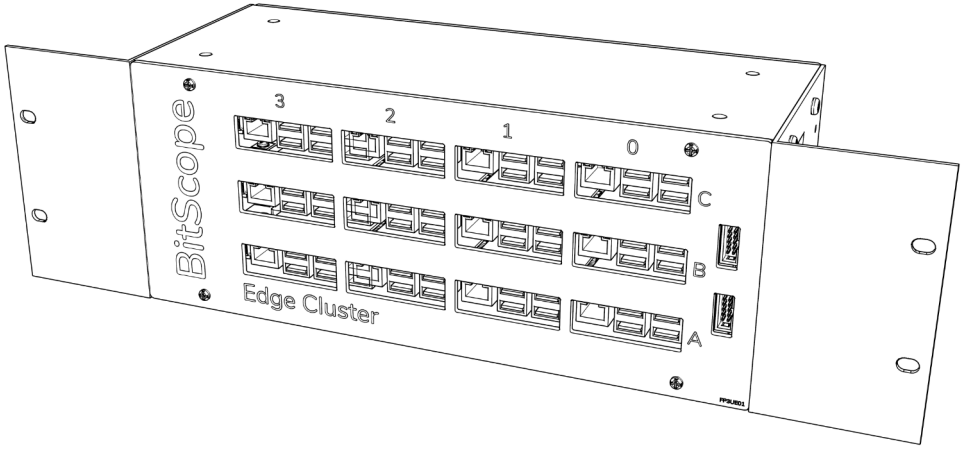

15

OPTION A DESK MOUNT
(or SHELF MOUNT)

COMPONENTS

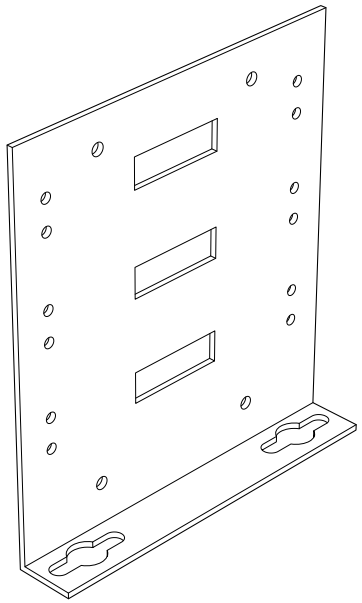

Side x 2

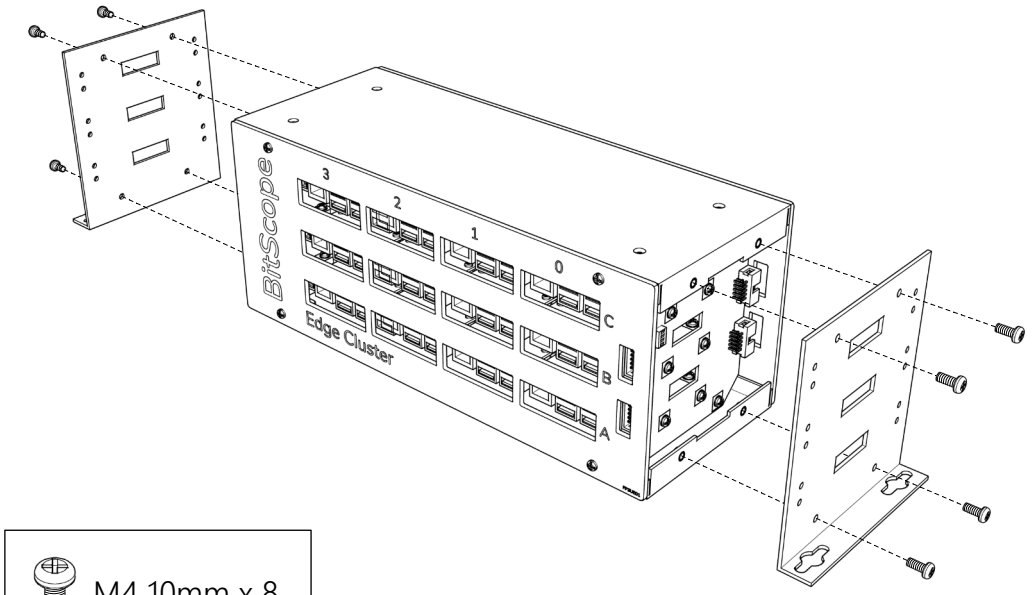

M4 10mm x 8

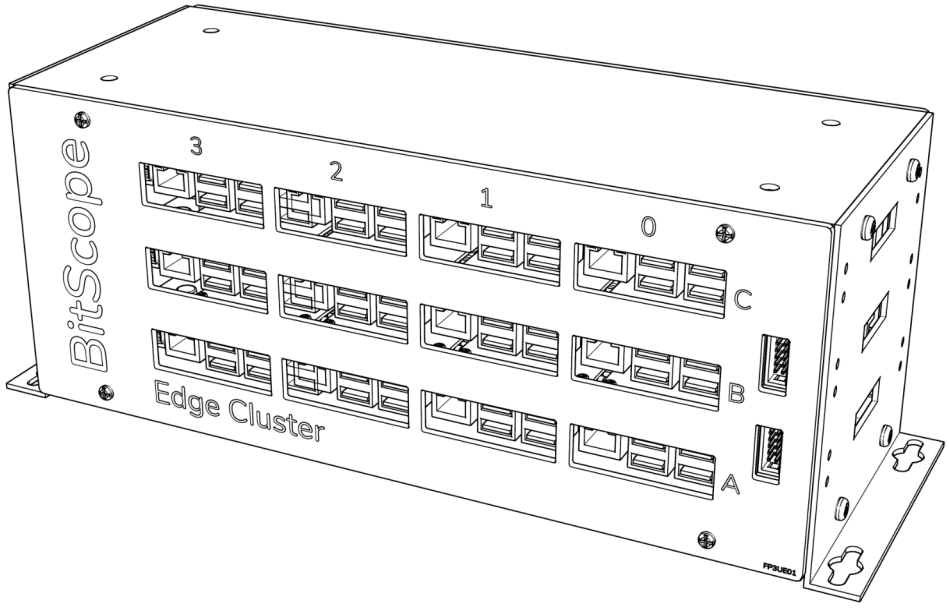

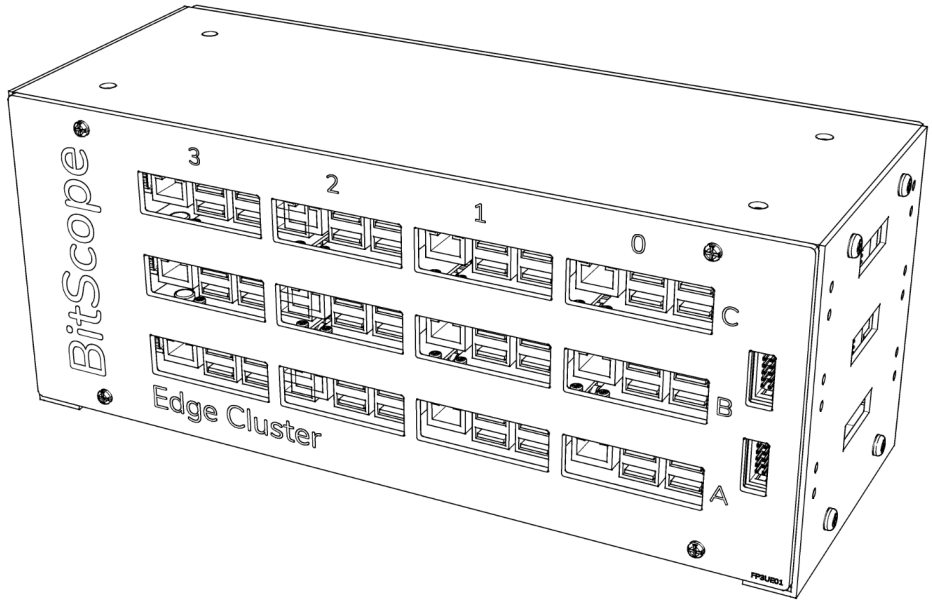

Sides may be reversed and feet applied for desktop use

OPTION B WALL MOUNT

(switch may be supplied seperately)

COMPONENTS

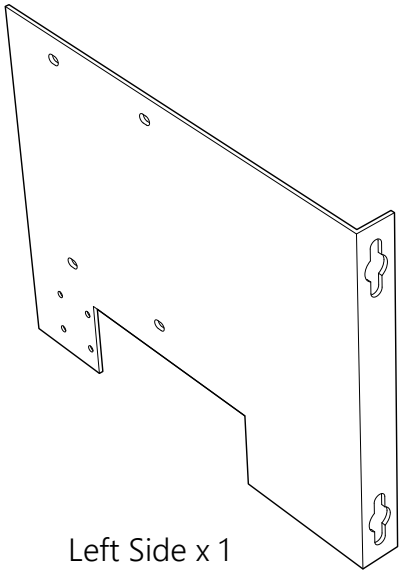

Left Side x 1

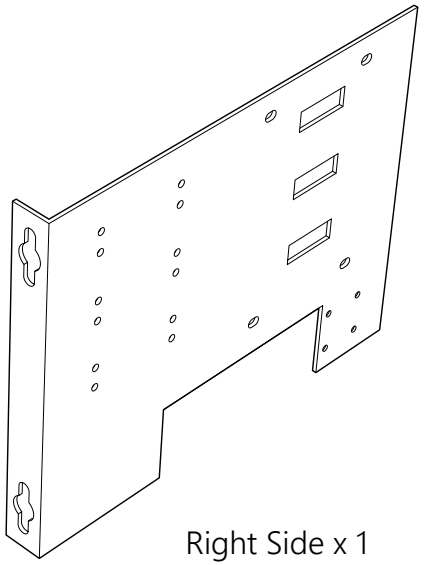

Right Side x 1

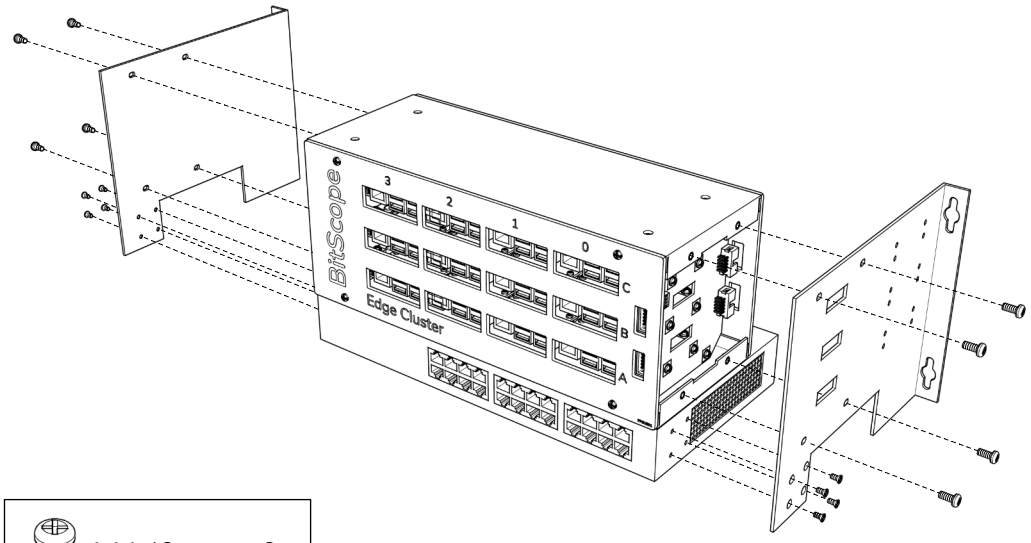

M4 10mm x 8

M3 CSK x 8
(included with the switch)

