BitScope Edge Cluster 24

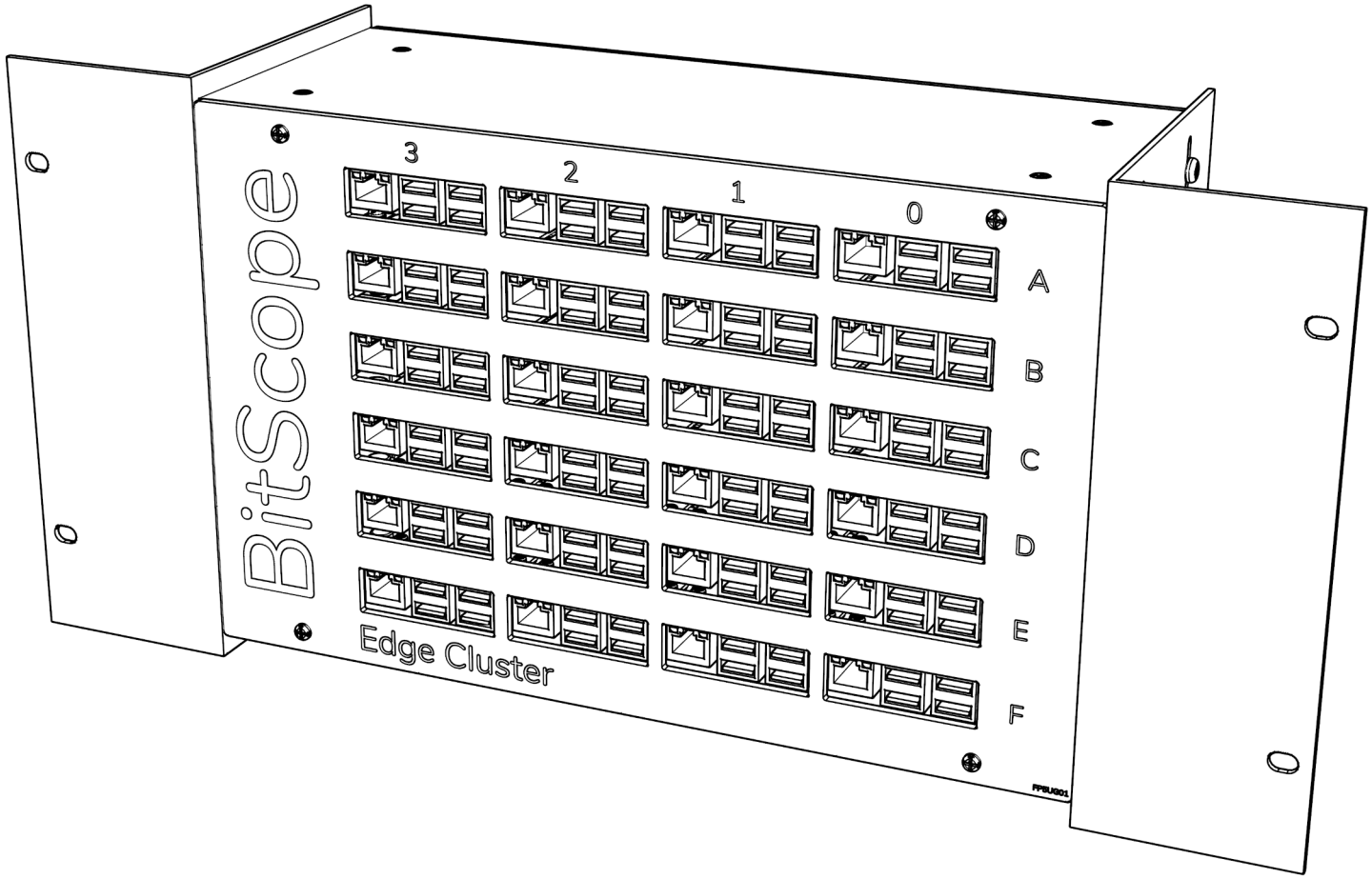

Product Assembly Guide

EC24A01-MCL6149K-01-lvf3pnvuwa25vsph

COMPONENTS

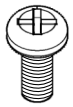
M4 10mm x 8


M3 6mm x 56


M3 10mm x 8


M3 CSK x 8


M3 Washer x 56

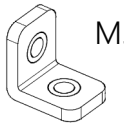
M3 Bracket x 32


Blade Support Bracket x1

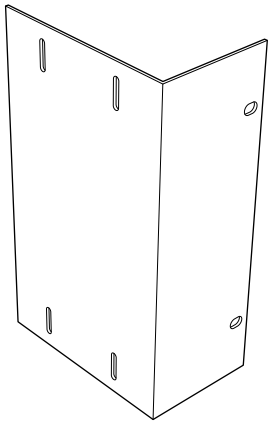
Ears x 2

RACK FAN KIT

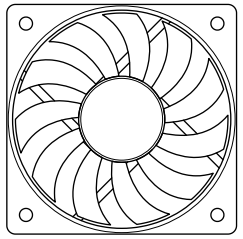
Fan 80mm x 4


M3 15mm x 16


M3 Nut x 16

may include fan guard

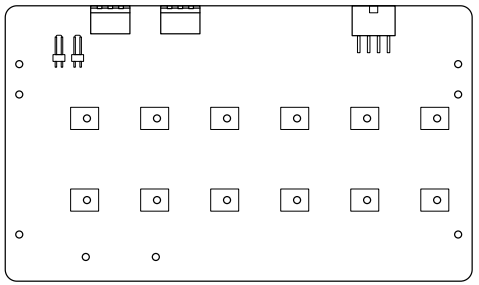
Power Plate x 1

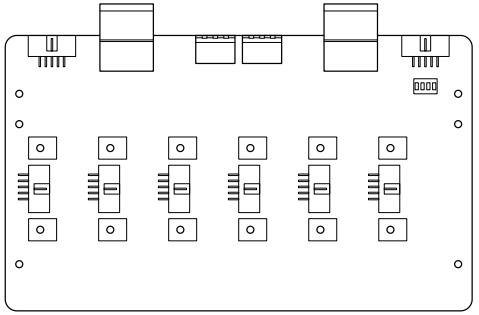
Ground Plate x 1

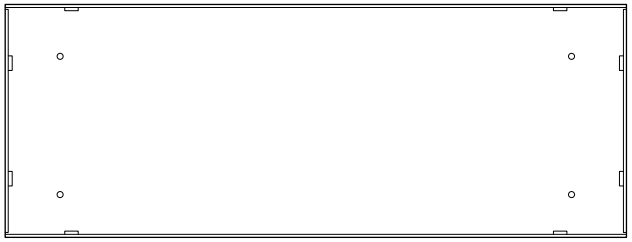
Tray x 2



Front Panel x 1

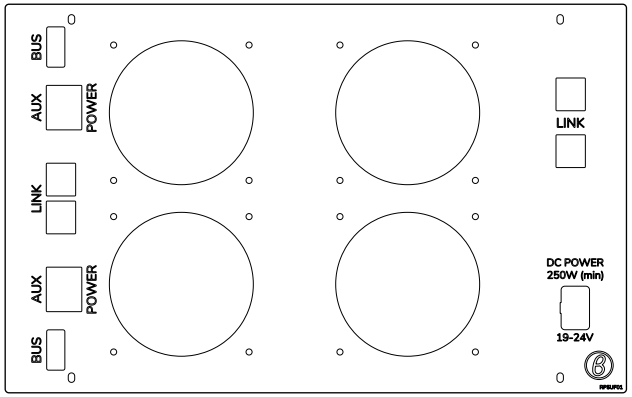

Back Panel x 1

Raspberry Pi x 24

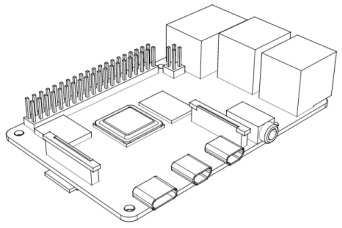
may be supplied seperately

Cluster Blade Kit x 6


M2.5 x 32

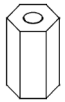
M2.5 10mm Standoff x 16

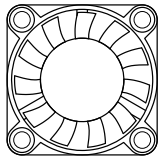
Fan x 4


M2.5 10mm x 16


M2.5 Nut x 16

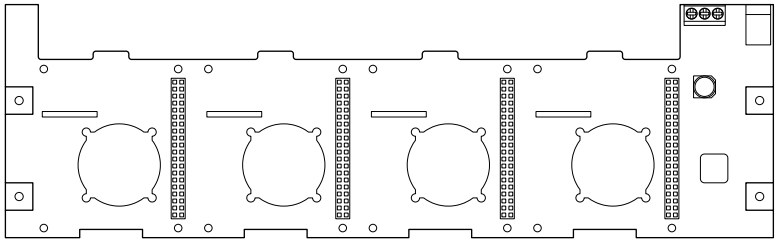
may be pre-assembled

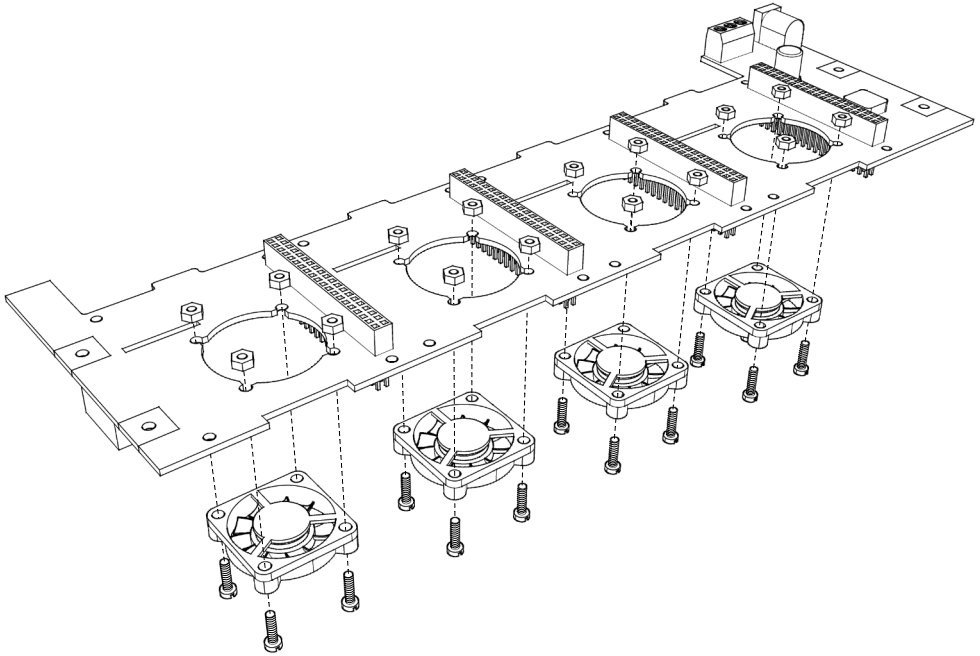

FAN KIT PARTS

- M2.5 10mm x 16
- M2.5 Nut x 16

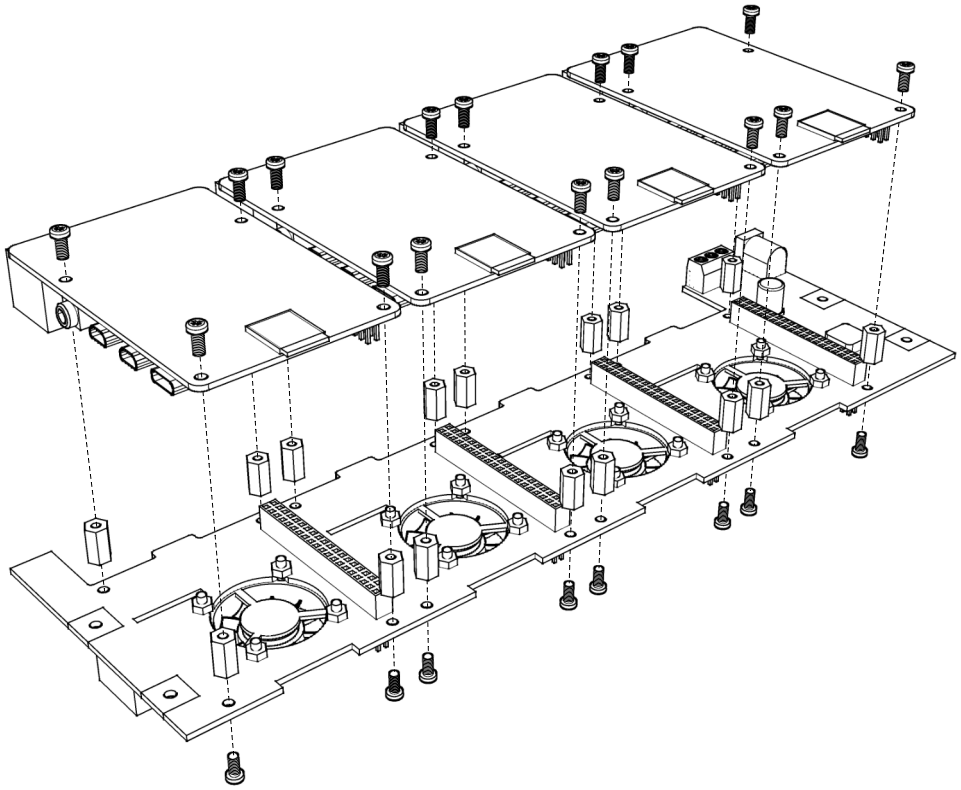

PI KIT PARTS

- M2.5 x 32
- M2.5 Standoff x 16

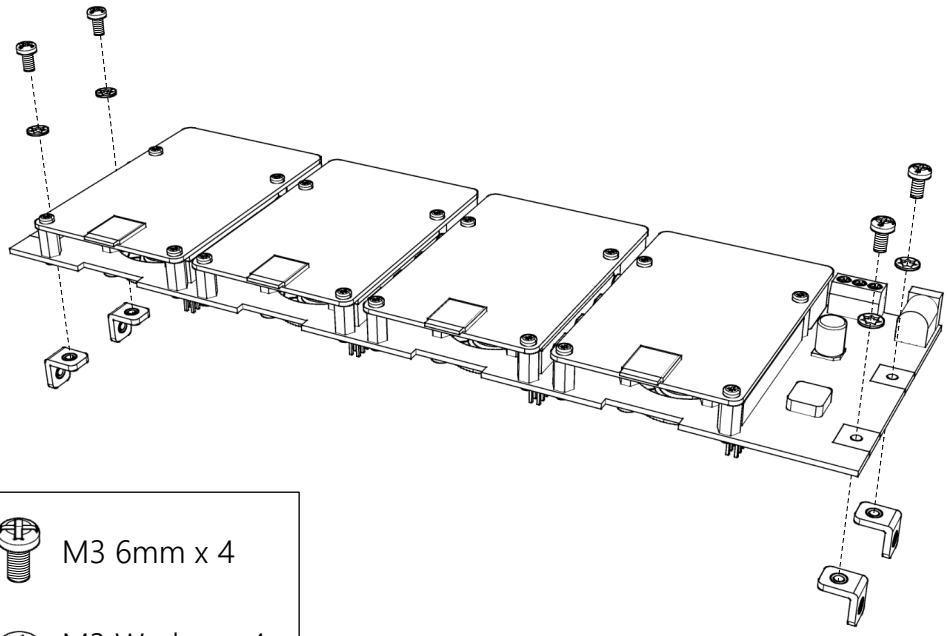

M3 6mm x 4

M3 Washer x 4

3

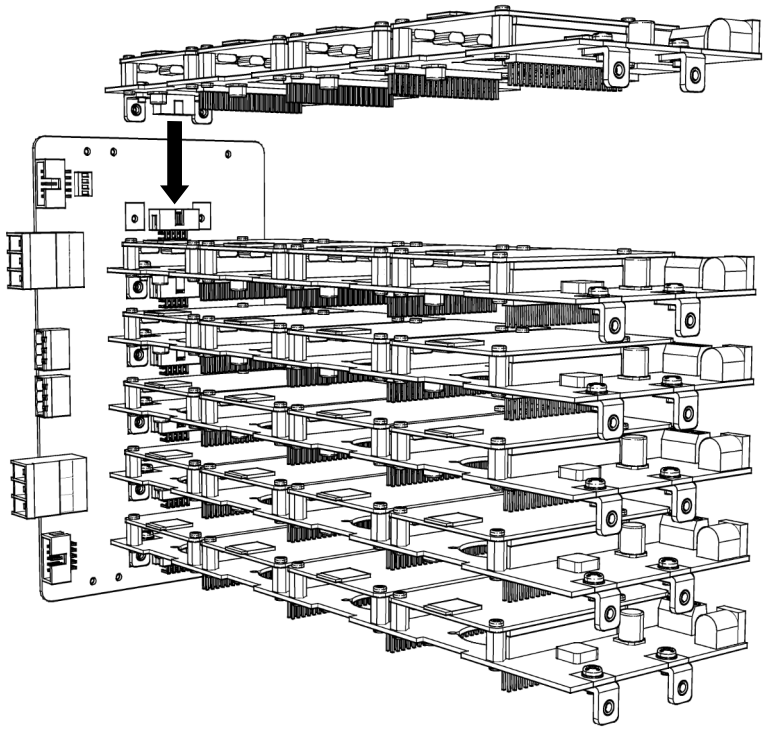

4

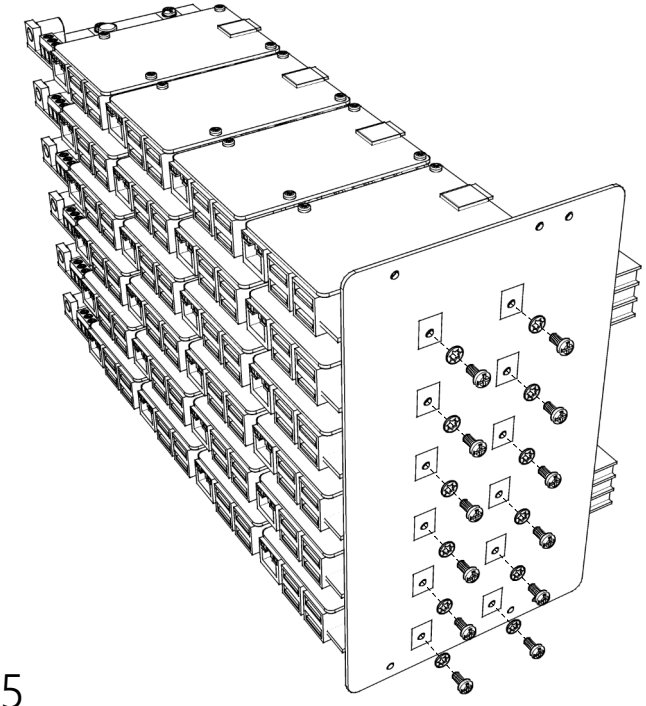

M3 6mm x 12

M3 Washer x 12

5

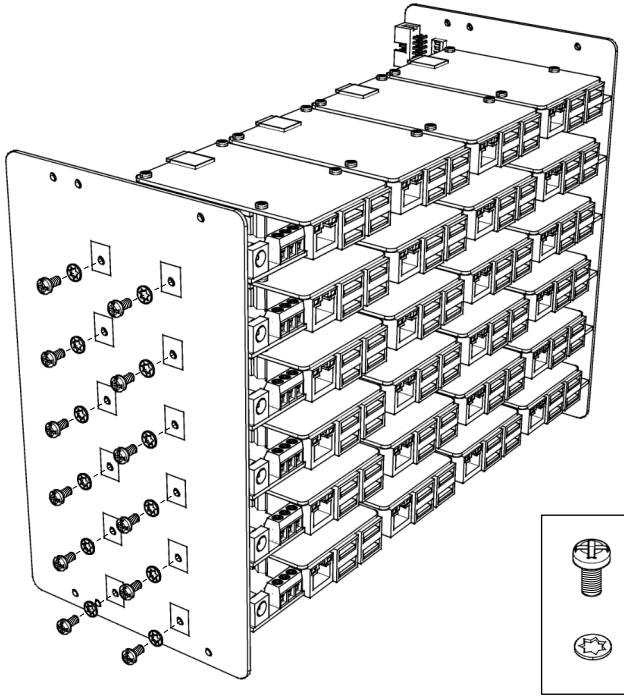

M3 6mm x 12

M3 Washer x 12

6

Cluster Pack Dip Switch Settings

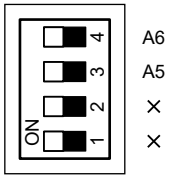


M3 6mm x 8


M3 Washer x 8

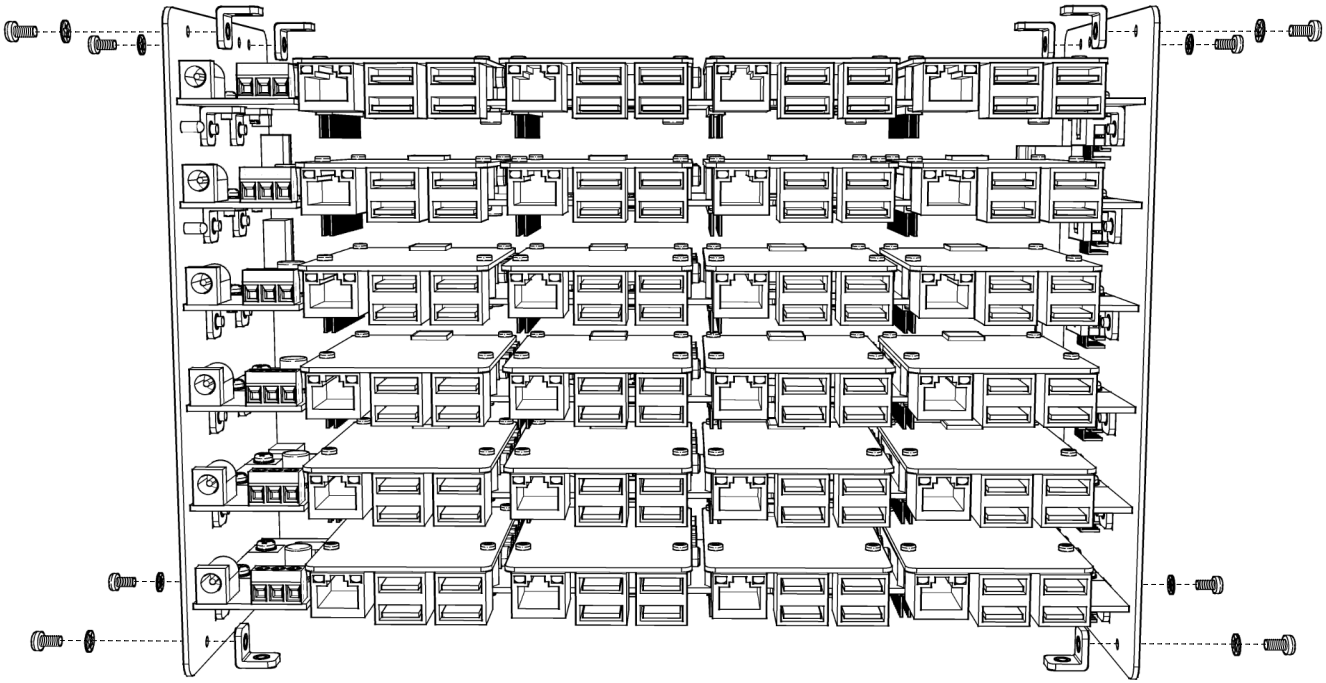

7

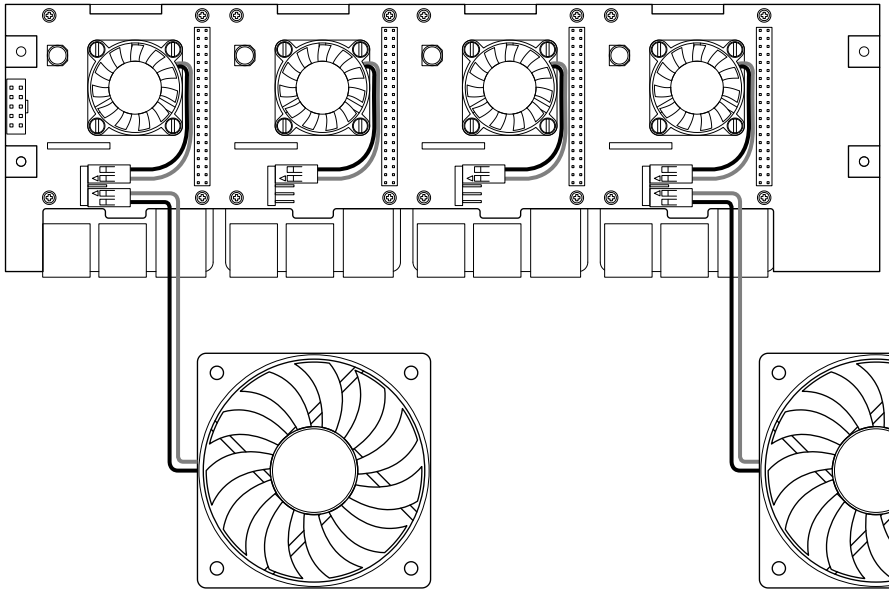

Connect external fans to different blades before next step

8

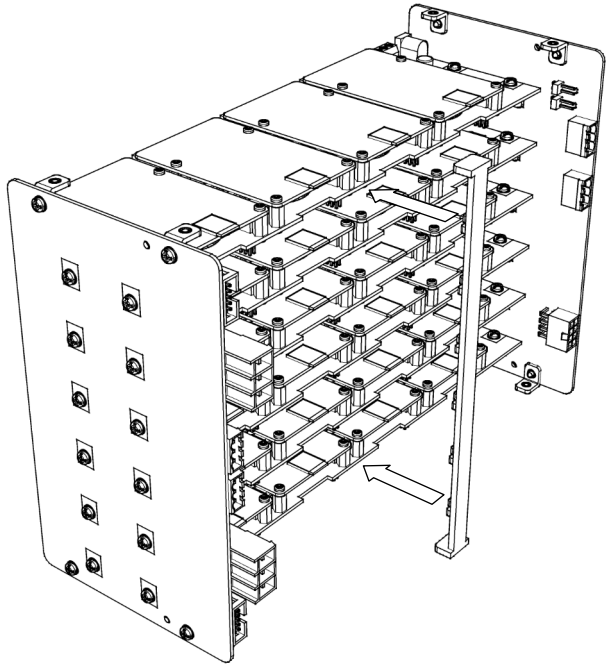

9

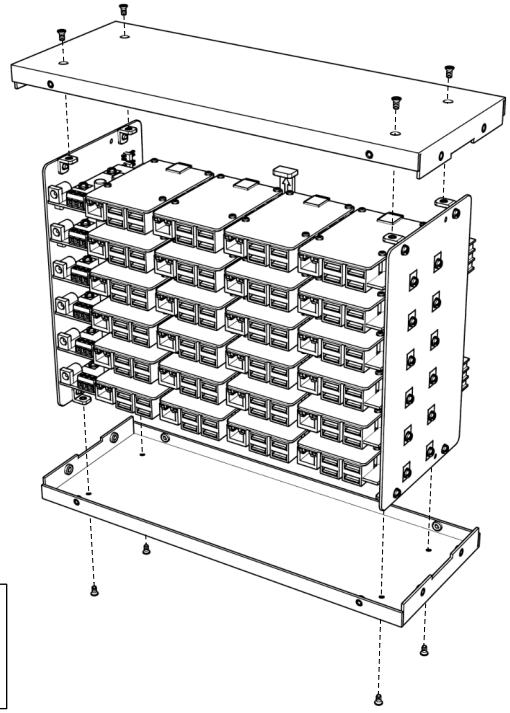

M3 CSK x 8

10

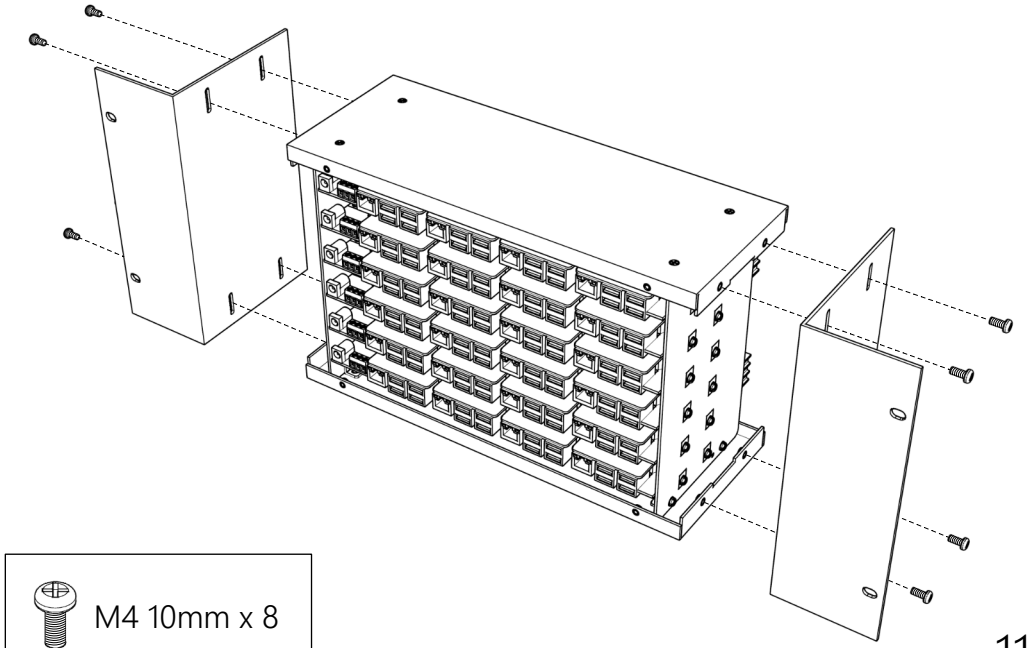

M4 10mm x 8

11

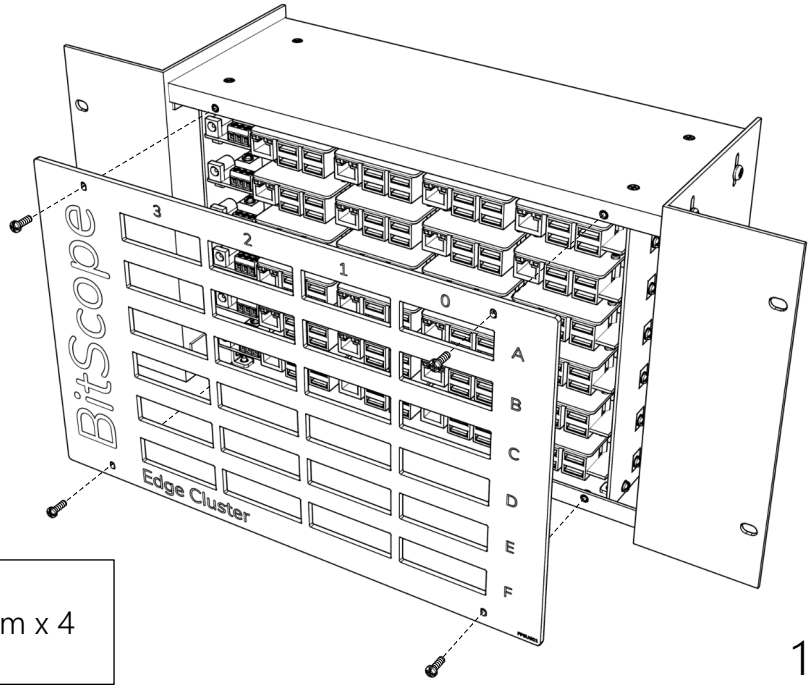

M3 10mm x 4

12

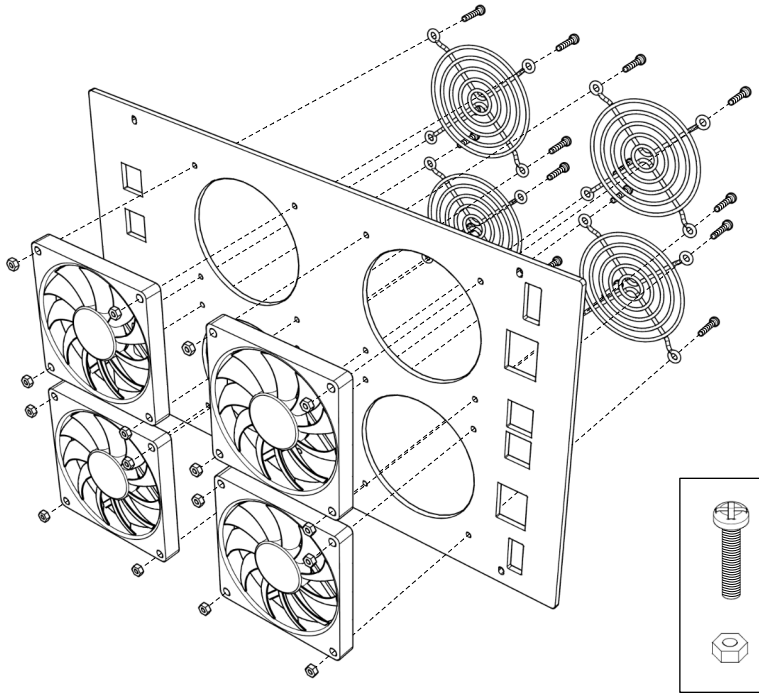

M3 15mm x 8

M3 Nut x 8

13

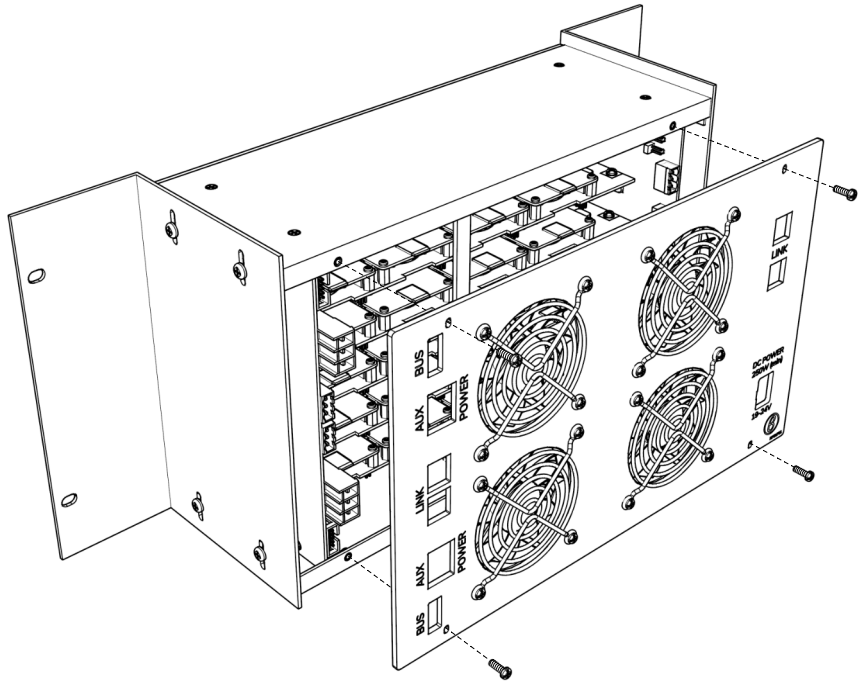

M3 10mm x 4

14

Refer to power supply guide for options

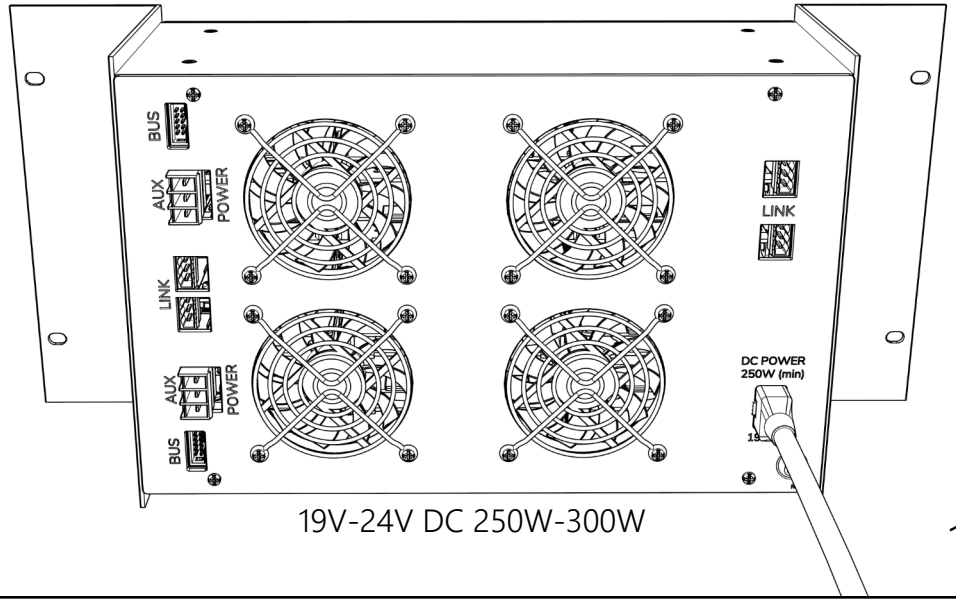

19V-24V DC 250W-300W

15

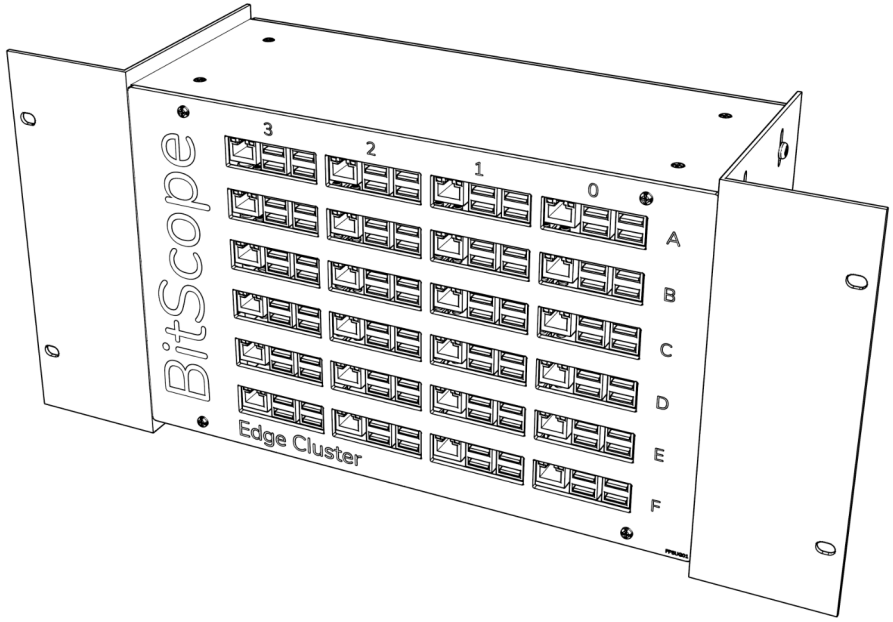

16

OPTION A DESK MOUNT
(or SHELF MOUNT)

COMPONENTS

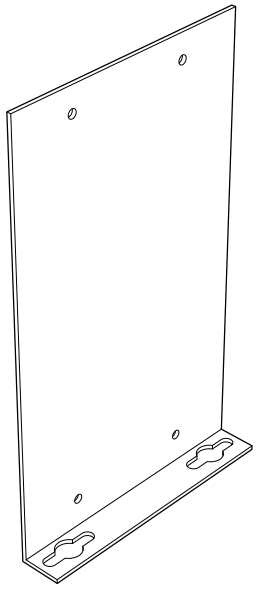

Side x 2

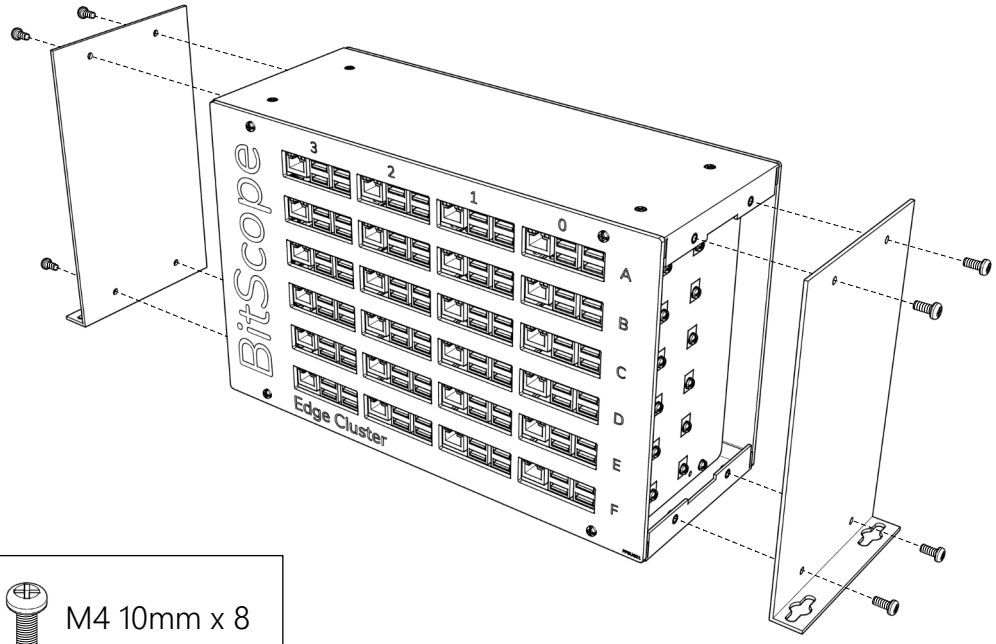

M4 10mm x 8

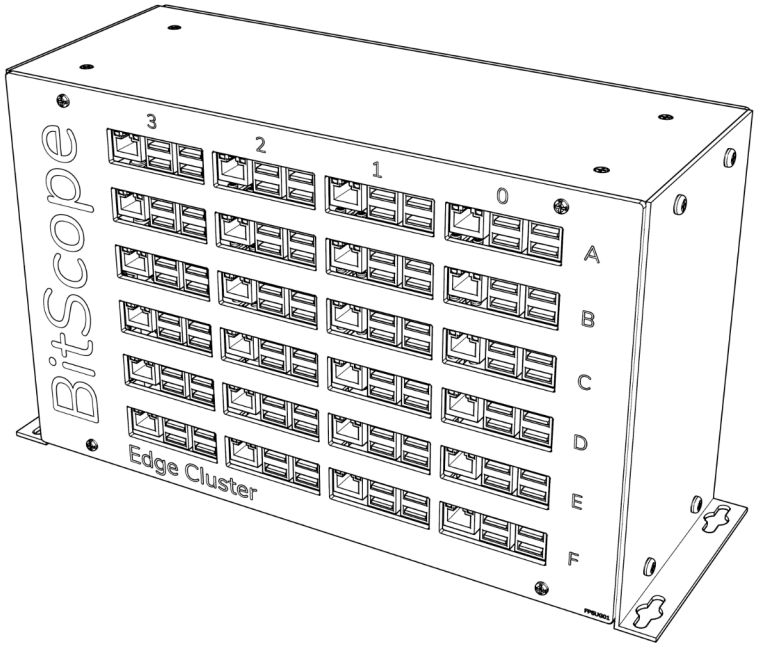

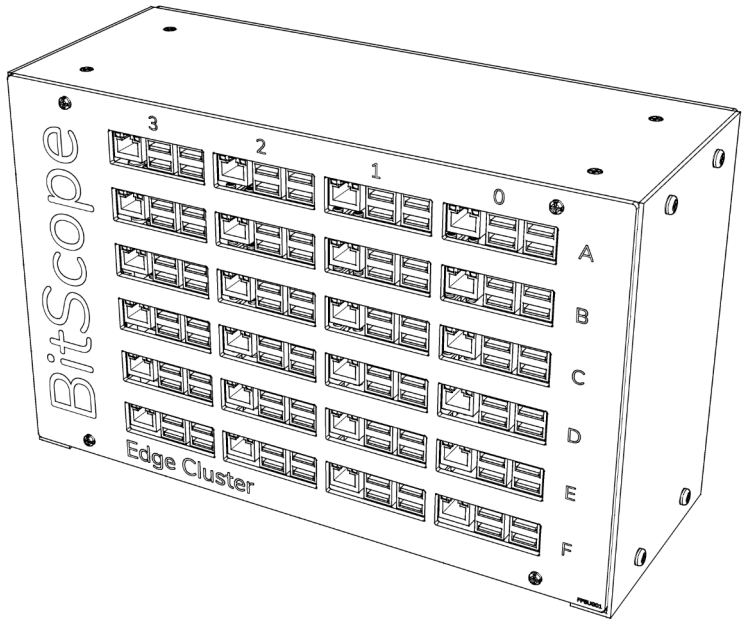

Sides may be reversed and feet applied for desktop use

OPTION B WALL MOUNT

switch may be supplied seperately)

COMPONENTS

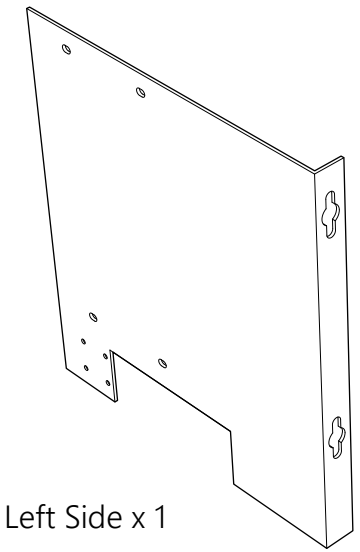

Left Side x 1

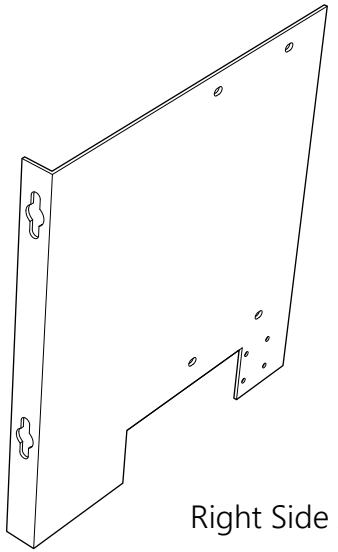

Right Side x 1

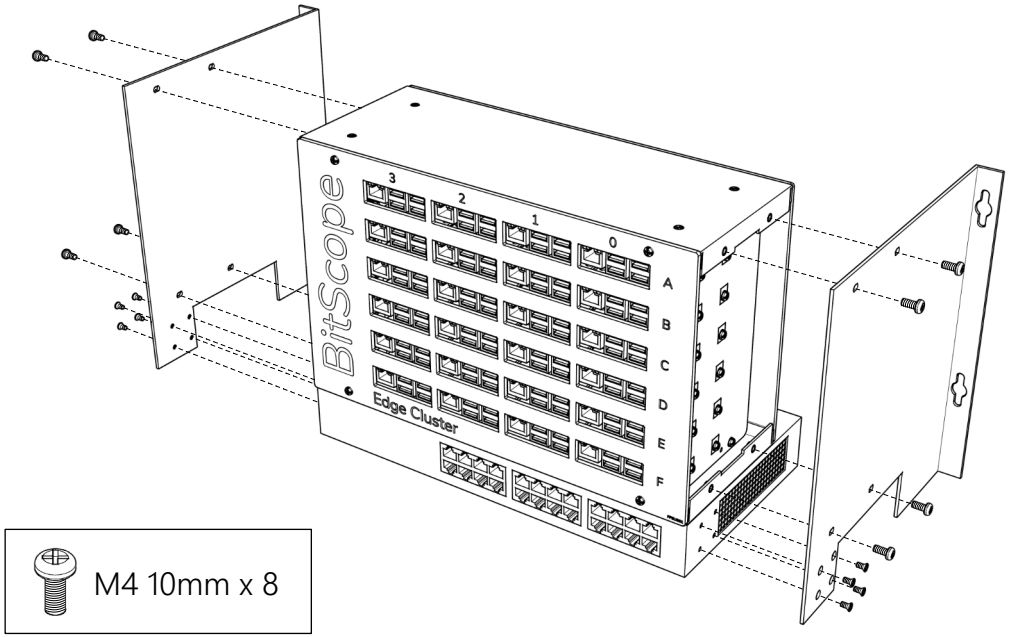

M4 10mm x 8

M3 CSK x 8
(included with the switch)

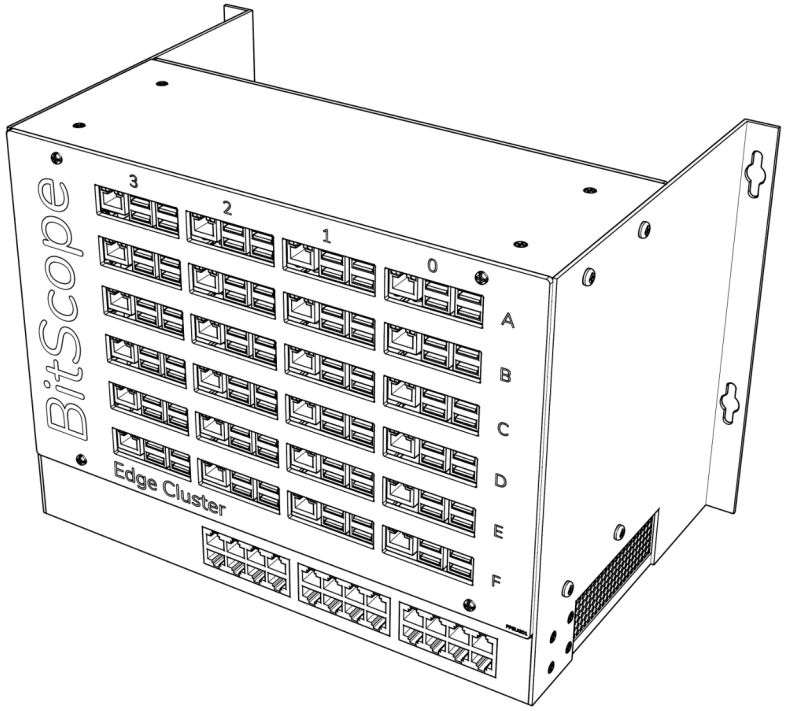

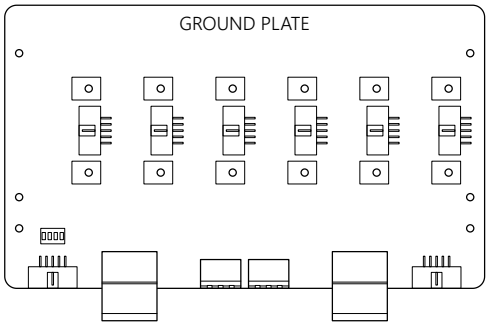

DEFAULT WIRING

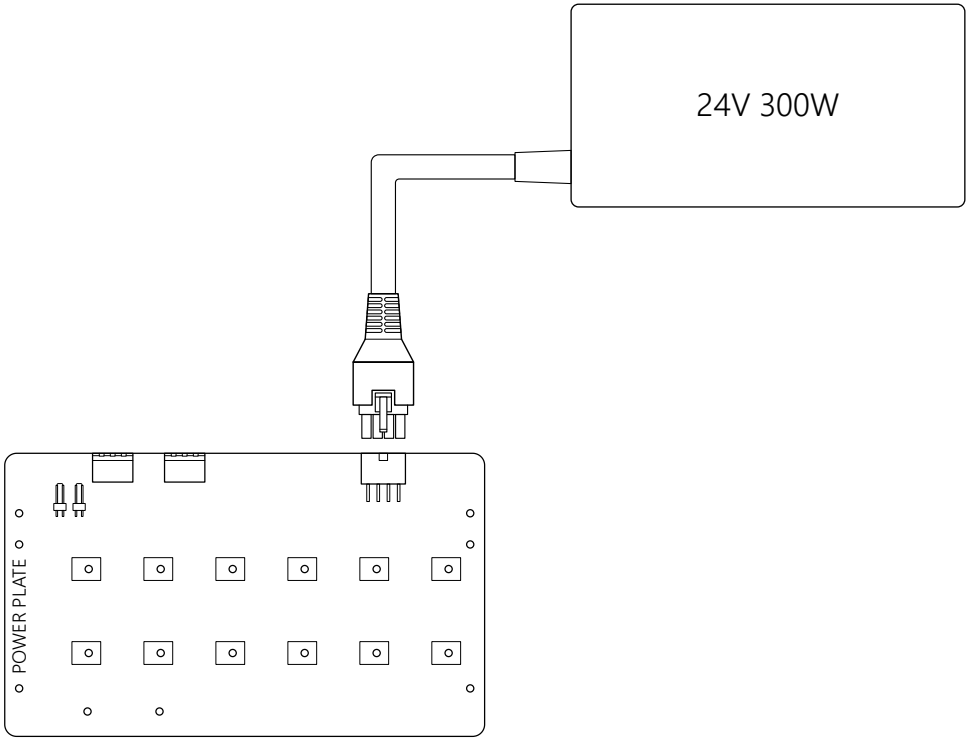

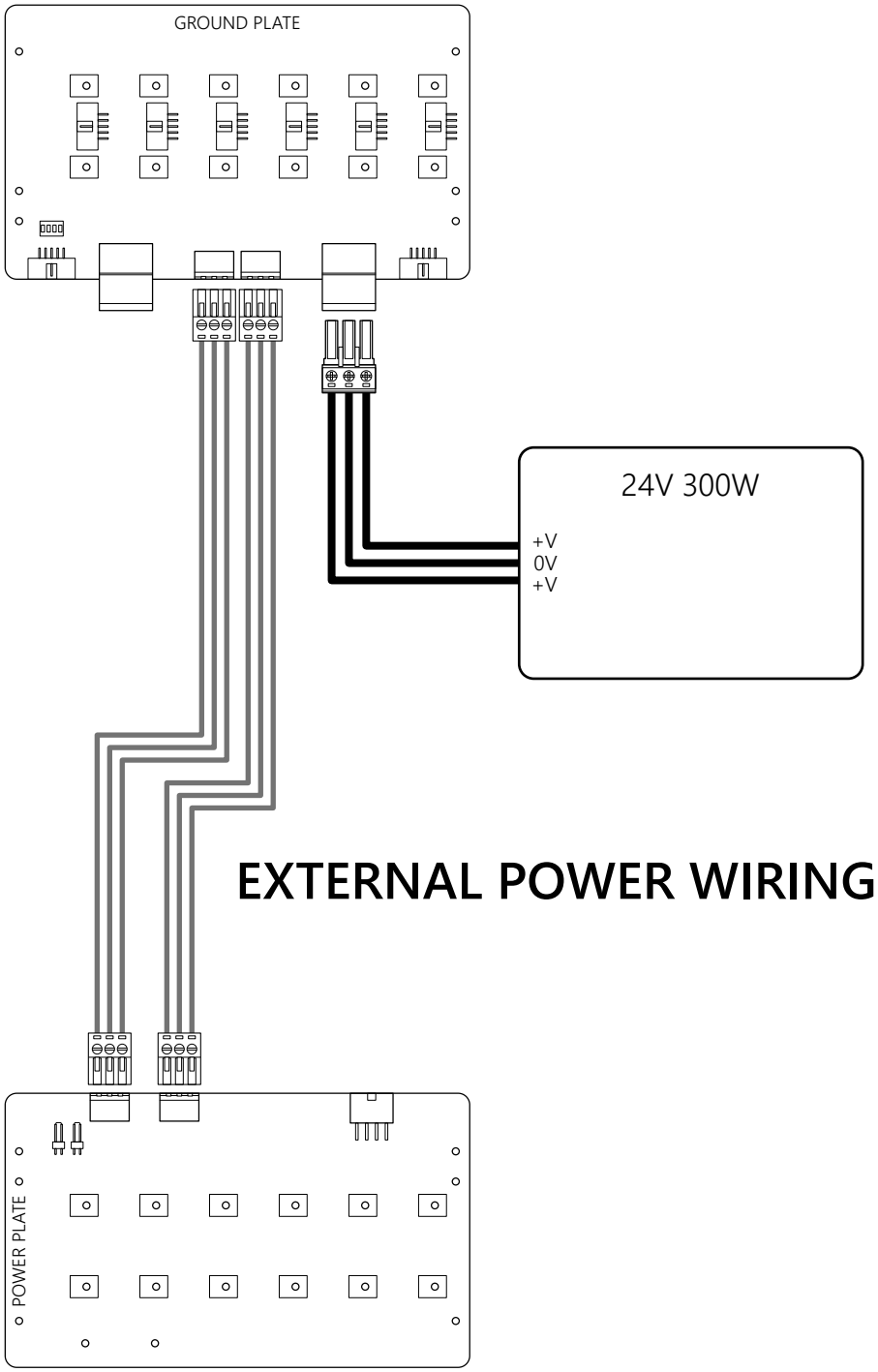

EXTERNAL POWER WIRING

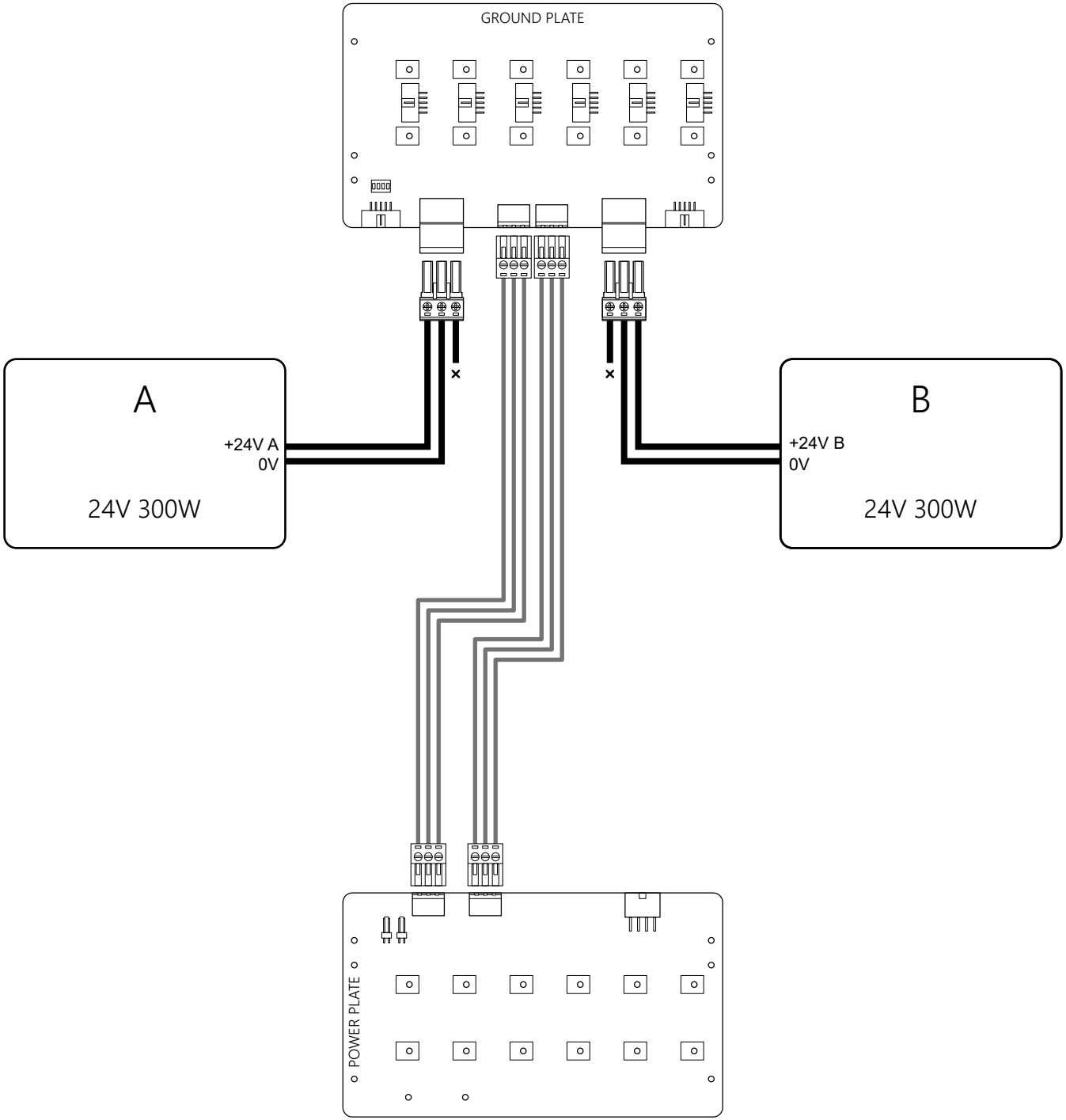

DUAL REDUNDANT POWER WIRING