BitScope

Edge Rack 48

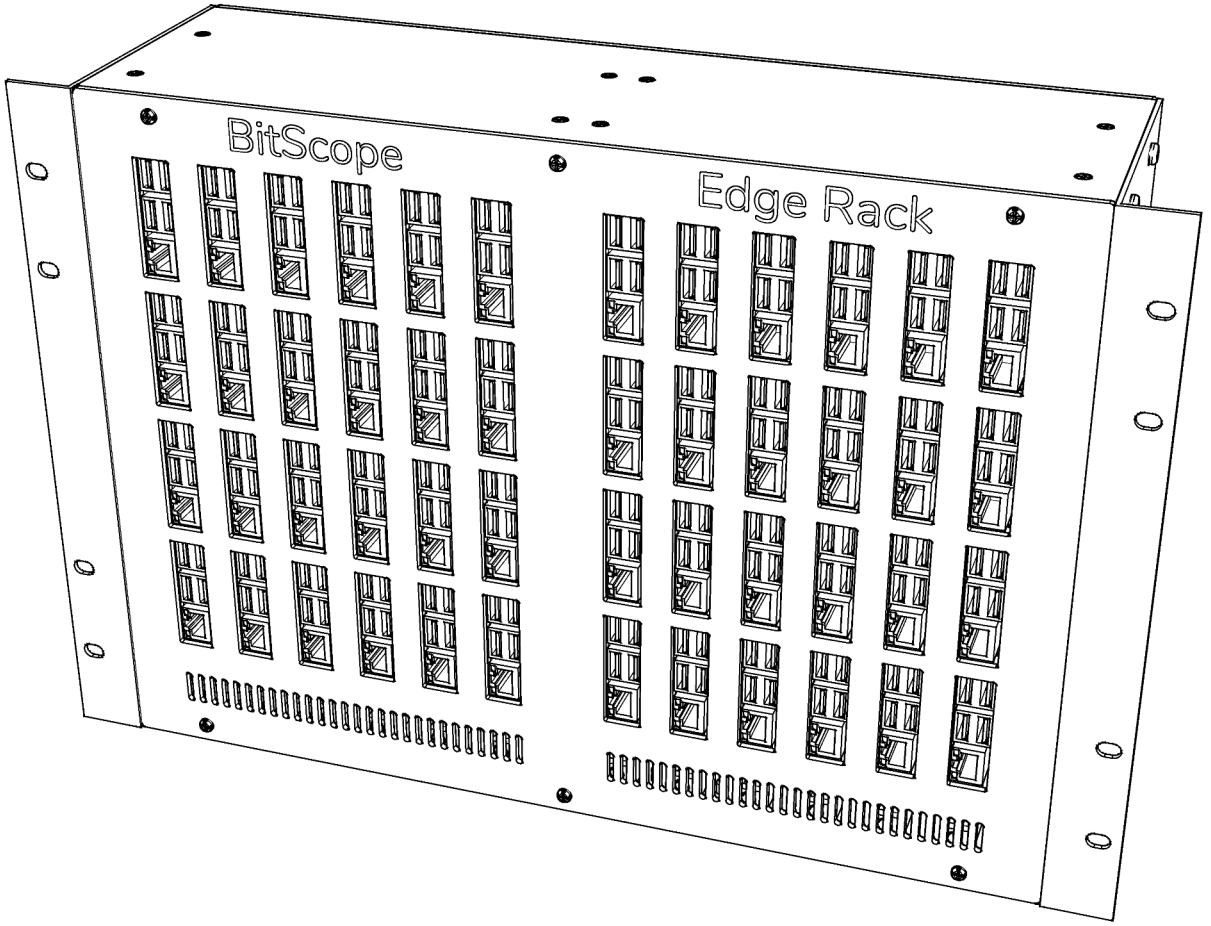

Product Assembly Guide

ER48A-N0EGUWF7-10-8pa274hwvk7jc1ld

COMPONENTS

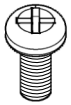
M4 10mm x 8


M3 6mm x 112


M3 10mm x 12


M3 CSK x 16


M3 Washer x 112


M3 Spacer 10mm x 16

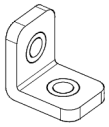
M3 Bracket x 48

RACK FAN KIT

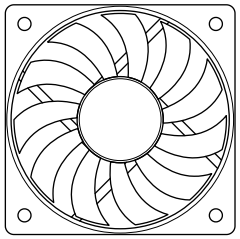
Fan 80mm x 4

may include fan guard

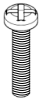
M3 15mm x 16


M3 Nut x 16

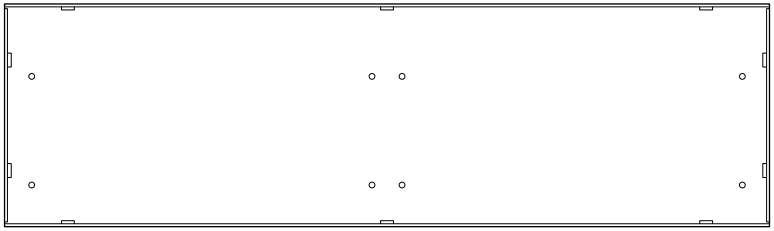
Mounting Tray x 2

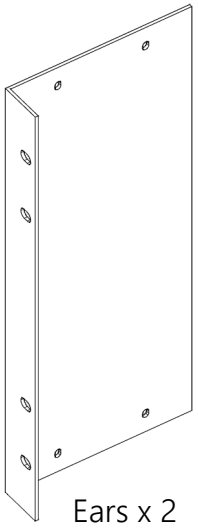
Ears x 2

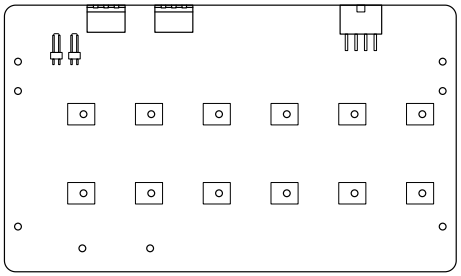
Power Plate x 2

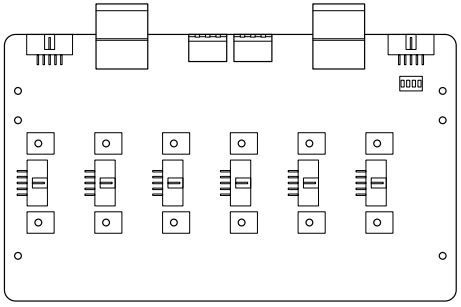
Ground Plate x 2

Front Panel x 1

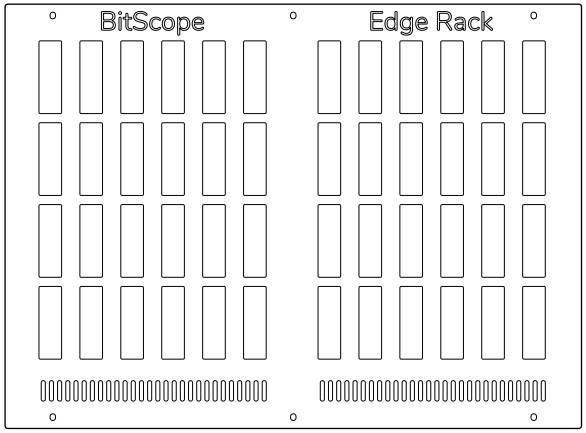

Back Panel x 1

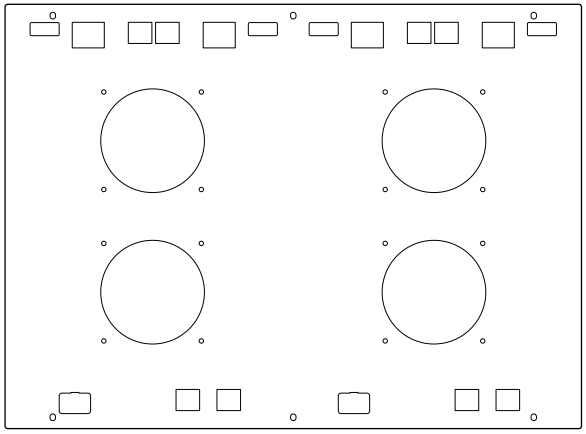

Raspberry Pi x 48

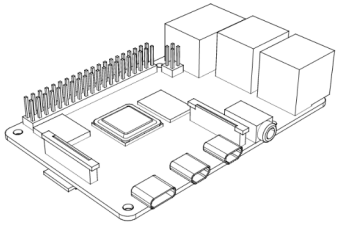
may be supplied seperately

Cluster Blade Kit x 12


M2.5 x 32

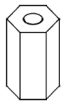
M2.5 10mm Standoff x 16

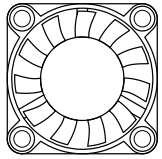
Fan x 4


M2.5 10mm x 16


M2.5 Nut x 16

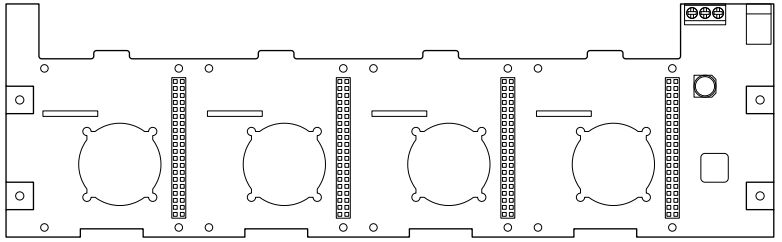
may be pre-assembled

Optional step

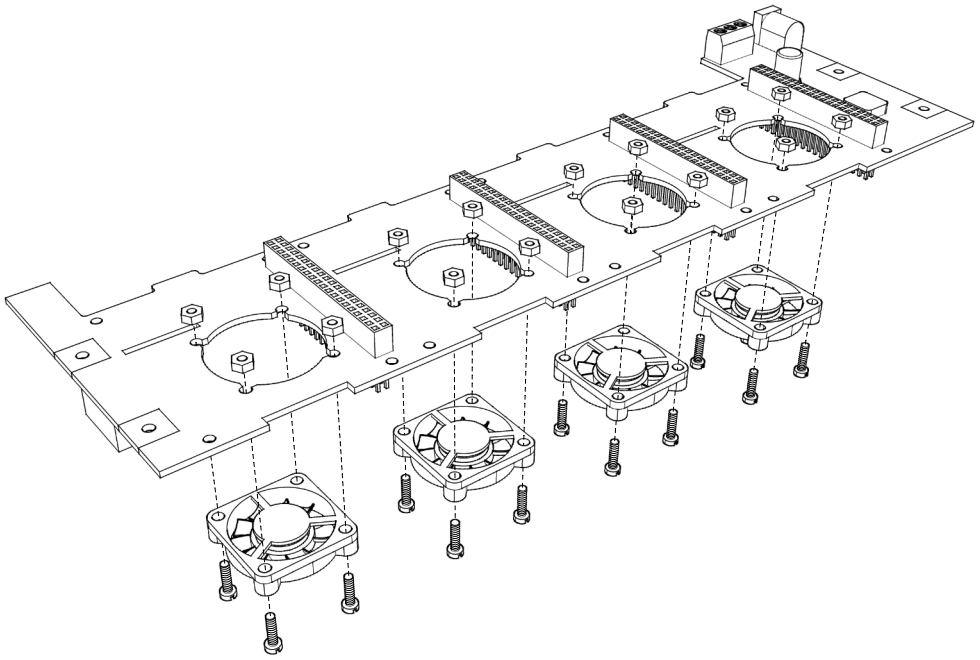

FAN KIT PARTS

- M2.5 10mm x 16
- M2.5 Nut x 16

1

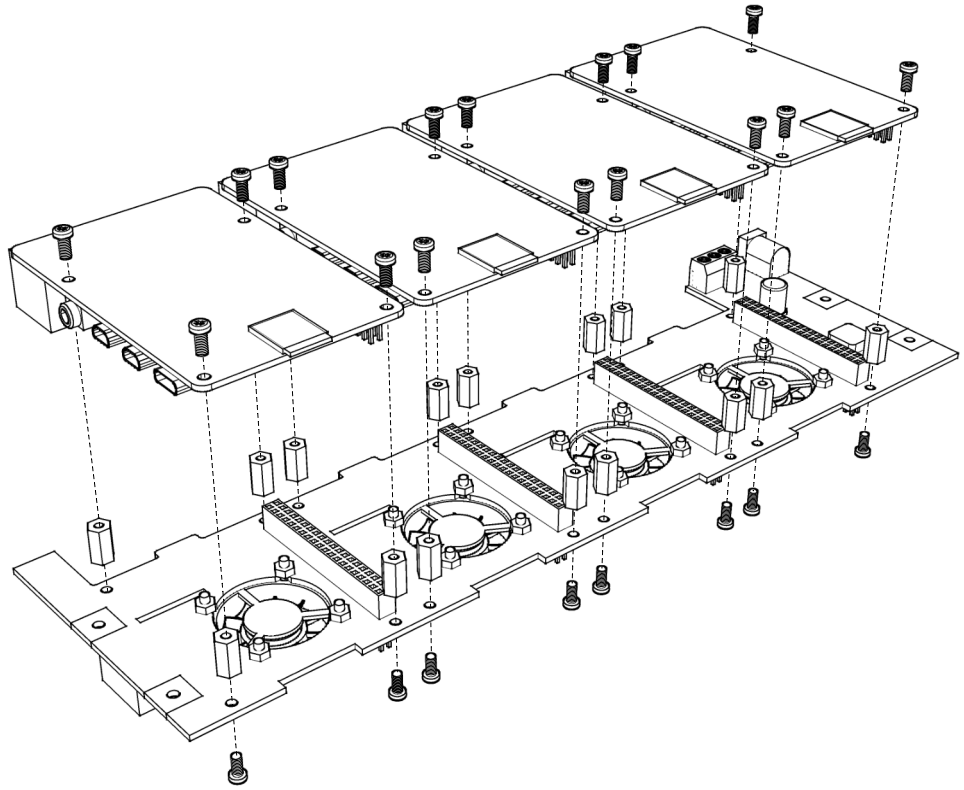

PI KIT PARTS

- M2.5 x 32
- M2.5 Standoff x 16

2

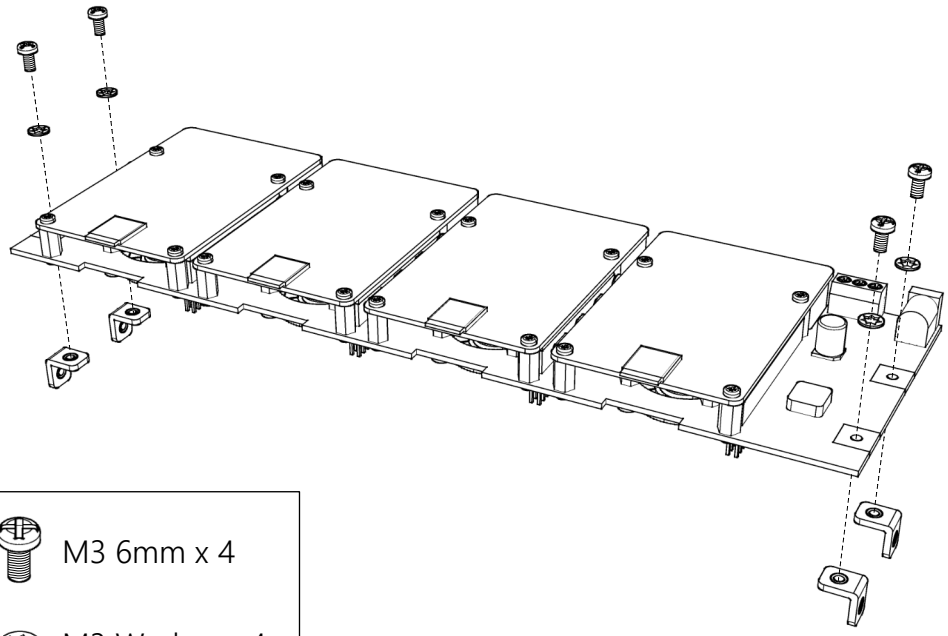

M3 6mm x 4

M3 Washer x 4

3

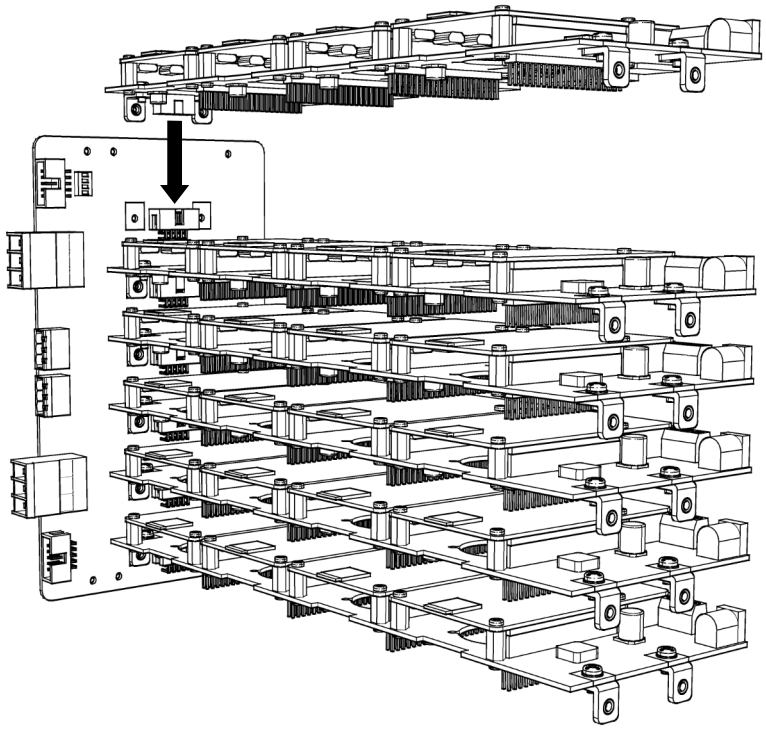

4

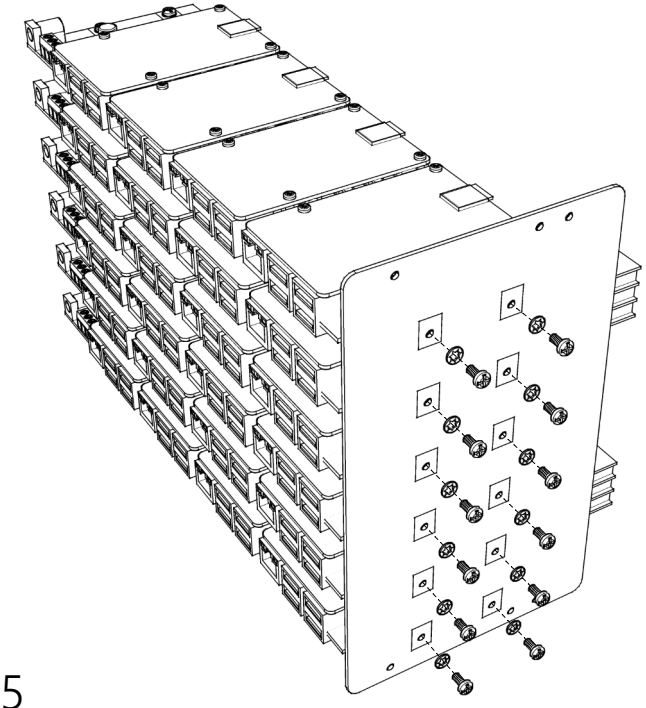

M3 6mm x 12

M3 Washer x 12

5

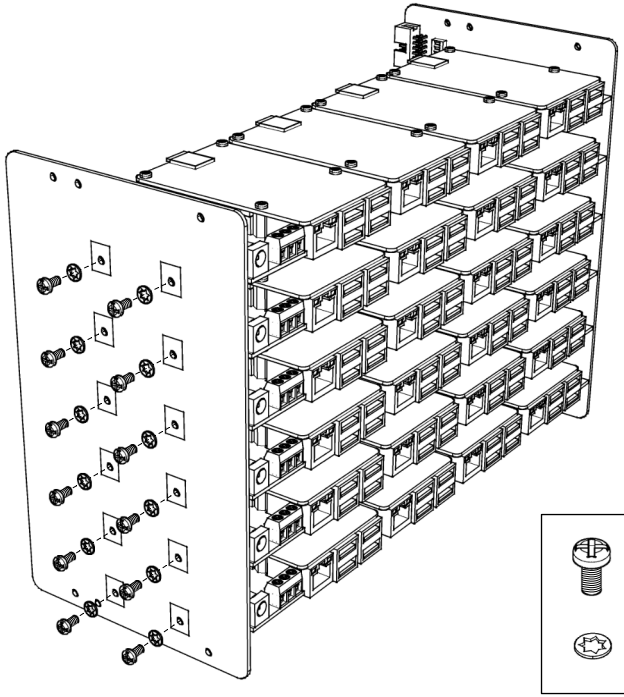

M3 6mm x 12

M3 Washer x 12

6

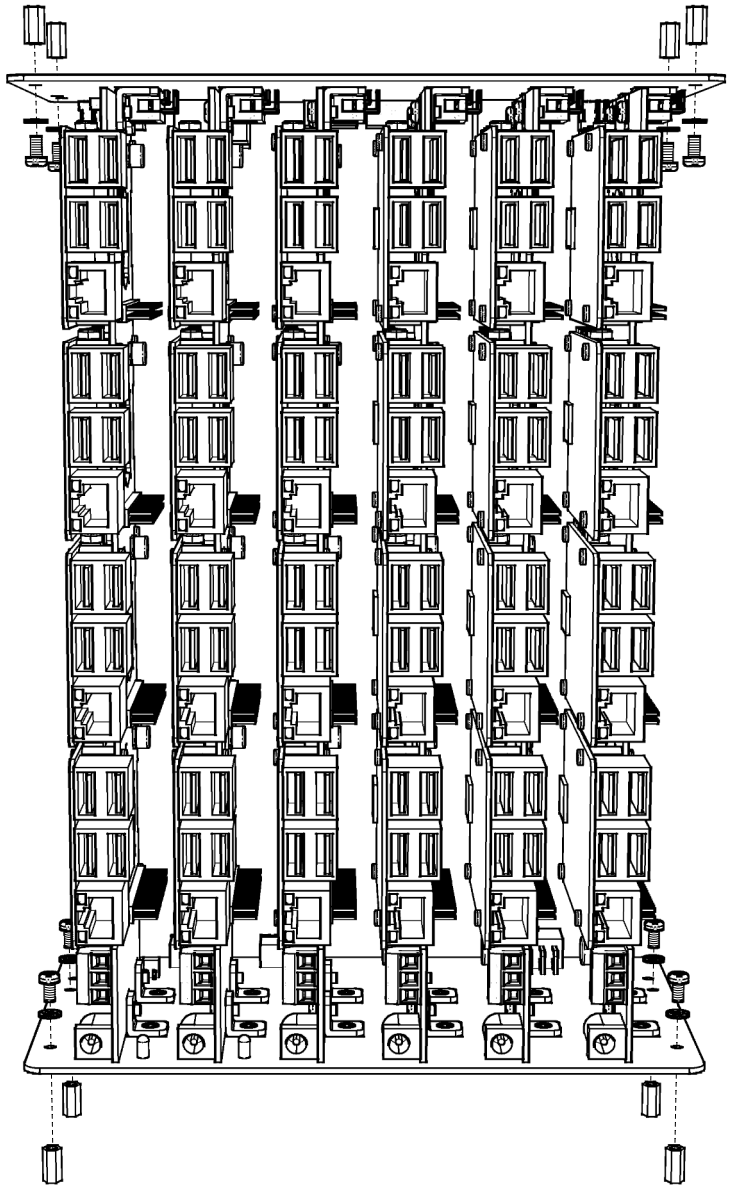

M3 6mm x 8

M3 Washer x 8

M3 Spacer 10mm x 8

Cluster Pack Dip Switch Settings

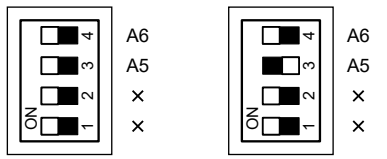

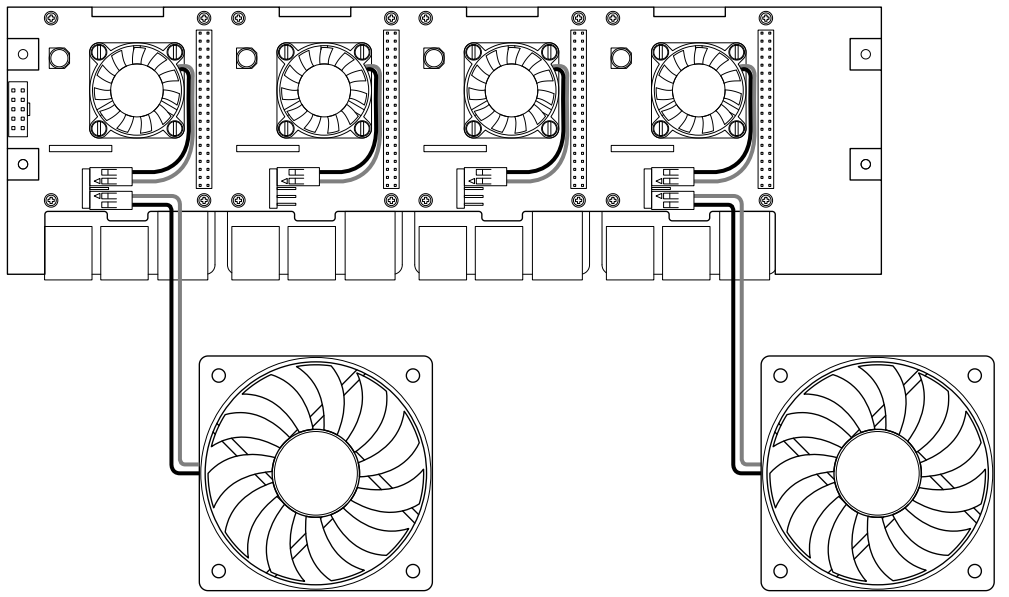

Connect external fans to different blades before next step

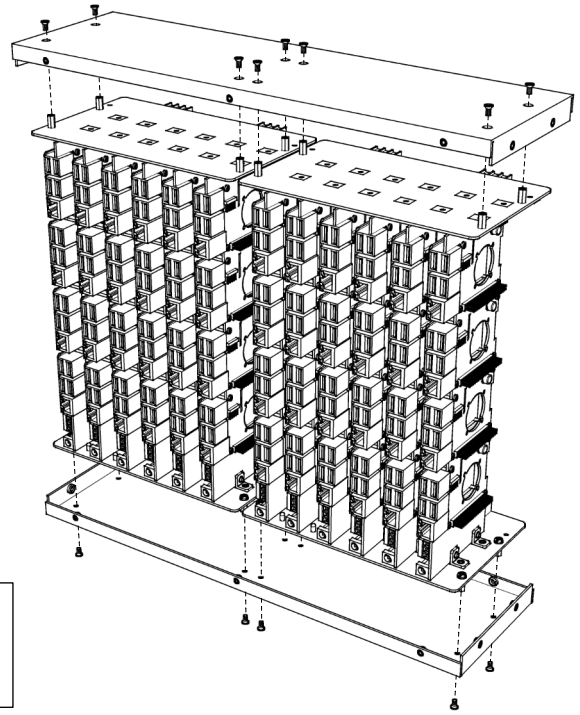

M3 CSK x 16

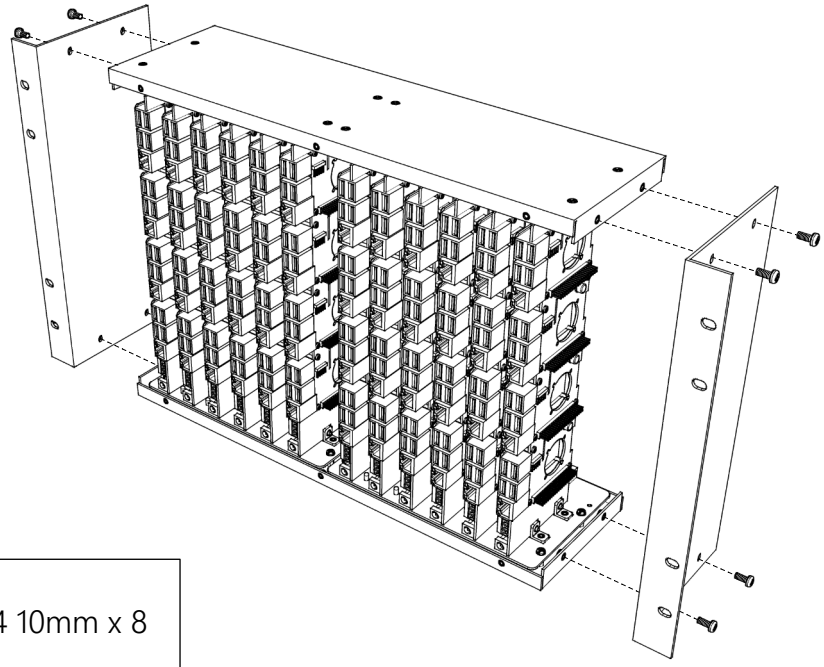

M4 10mm x 8

10

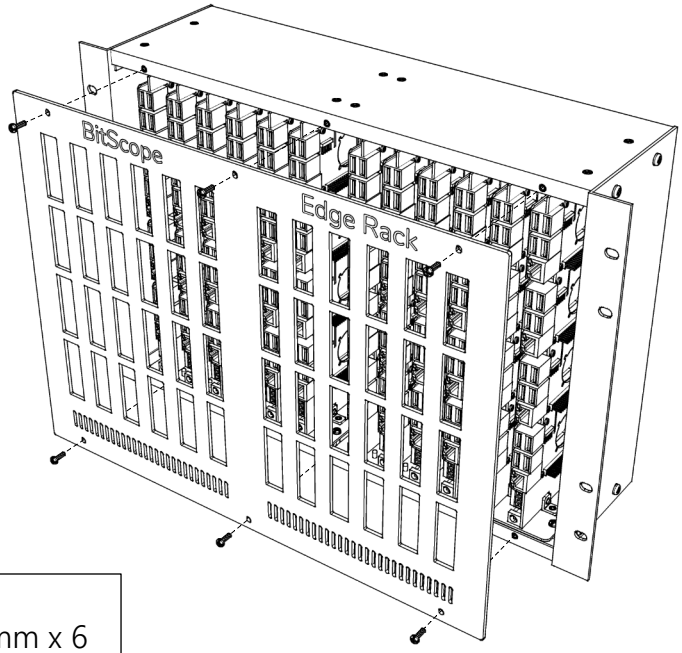

M3 10mm x 6

11

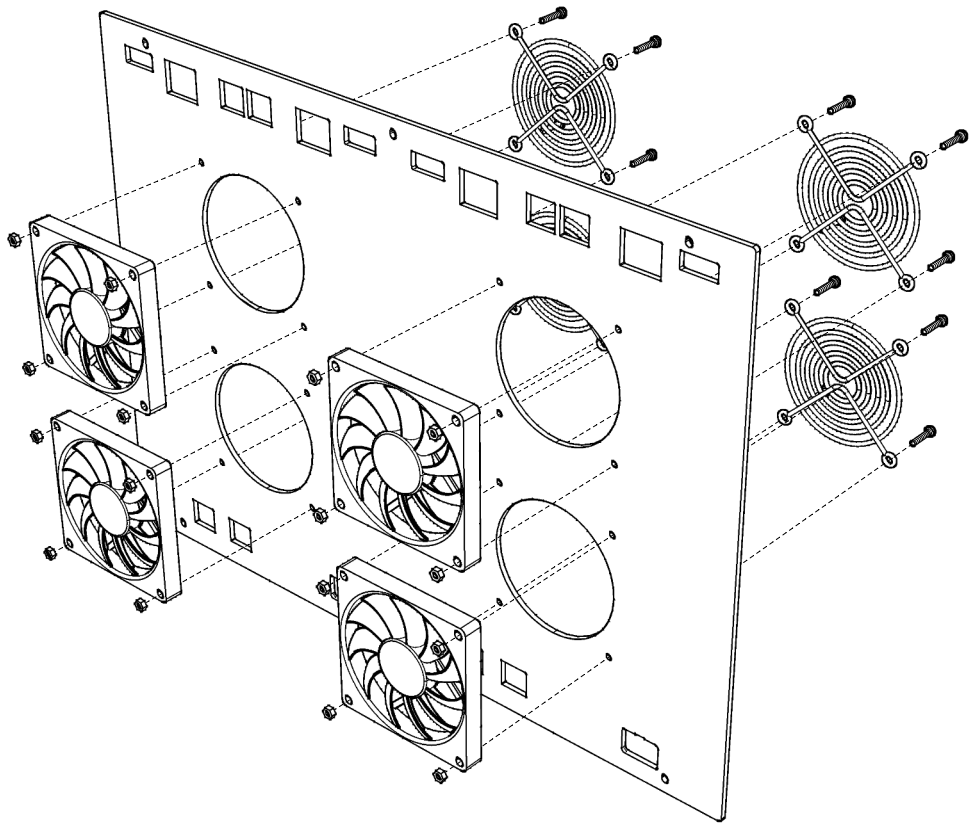

M3 15mm x 16

M3 Nut x 16

12

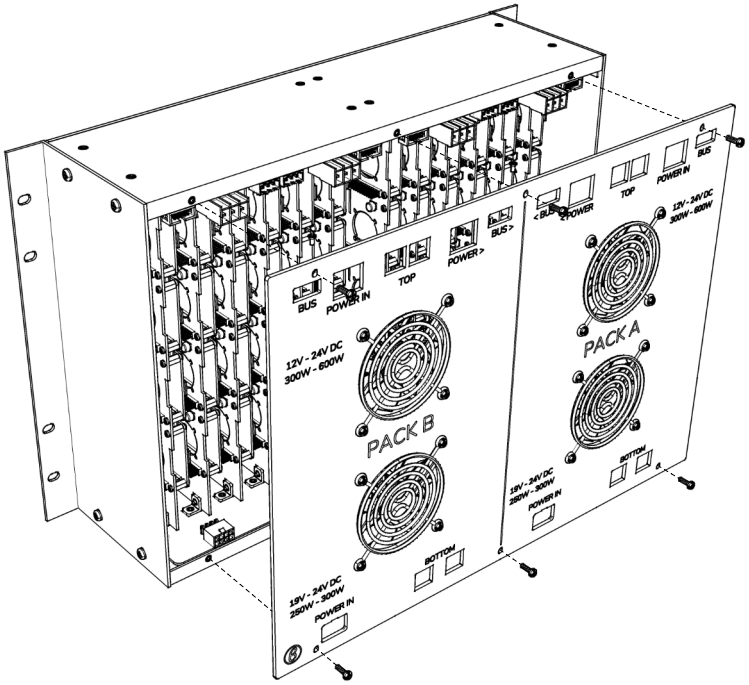

M3 10mm x 6

Refer to power supply guide for options

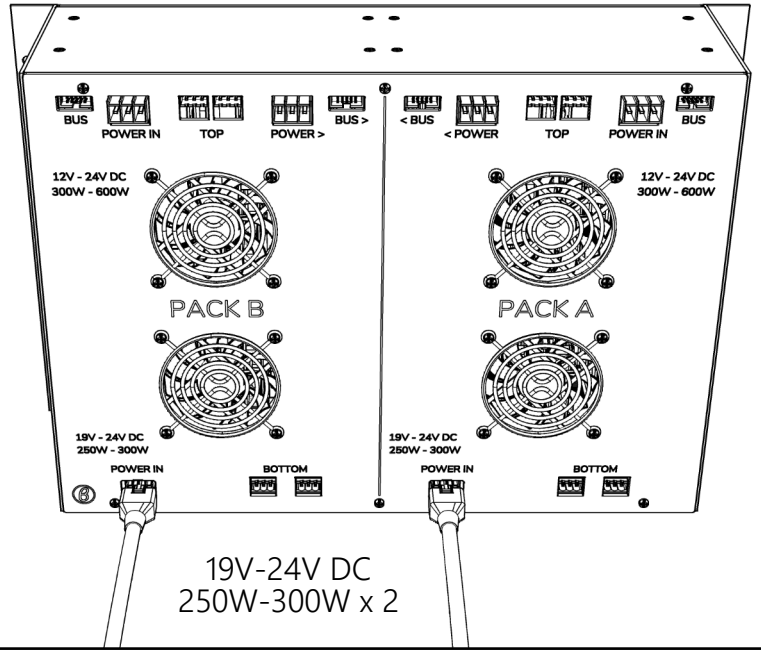

19V-24V DC
250W-300W x 2

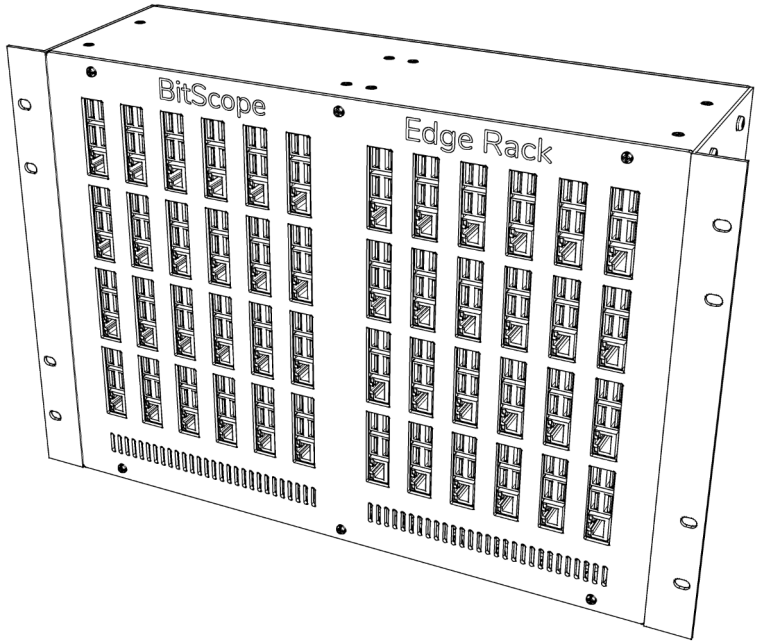

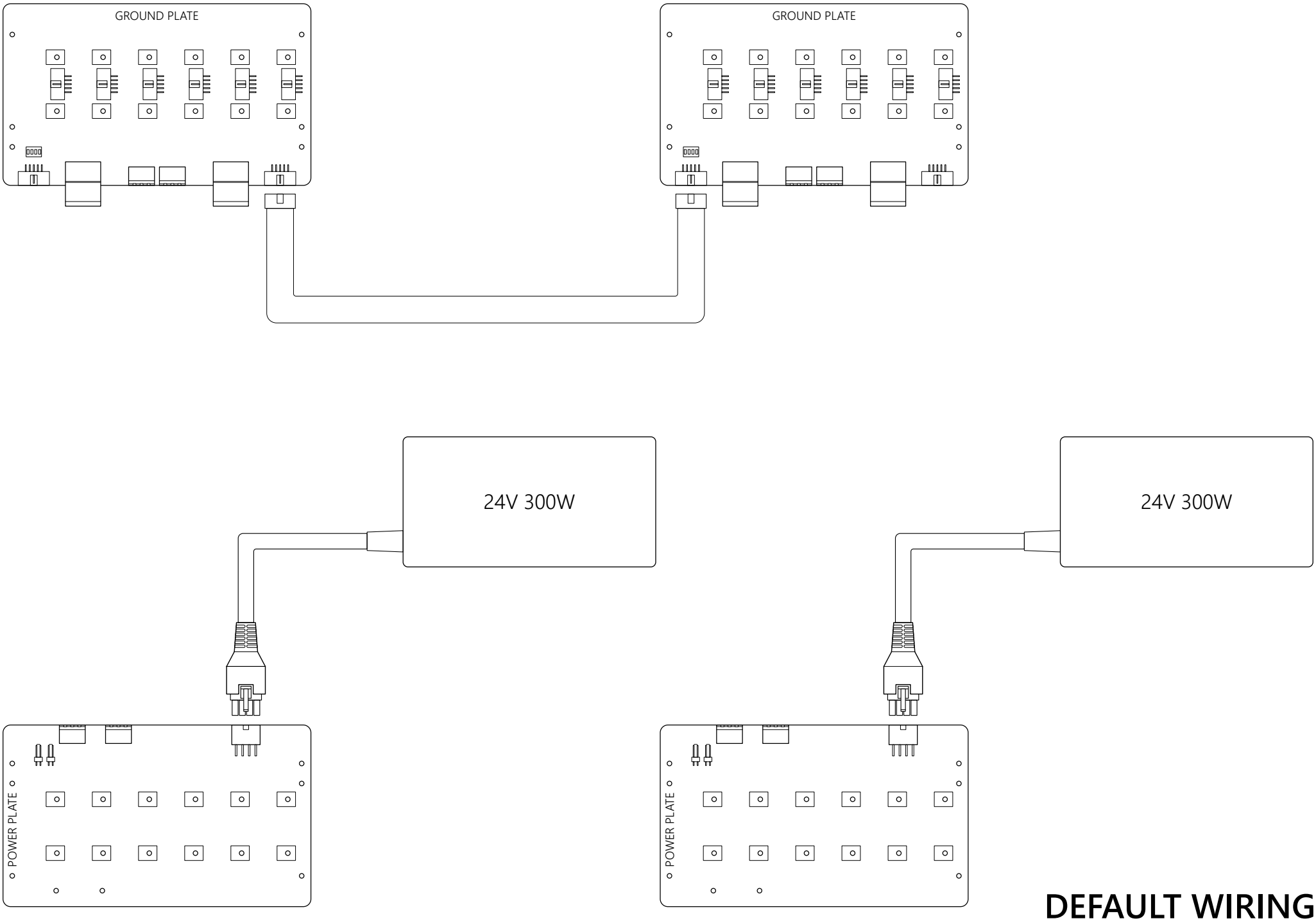

DEFAULT WIRING

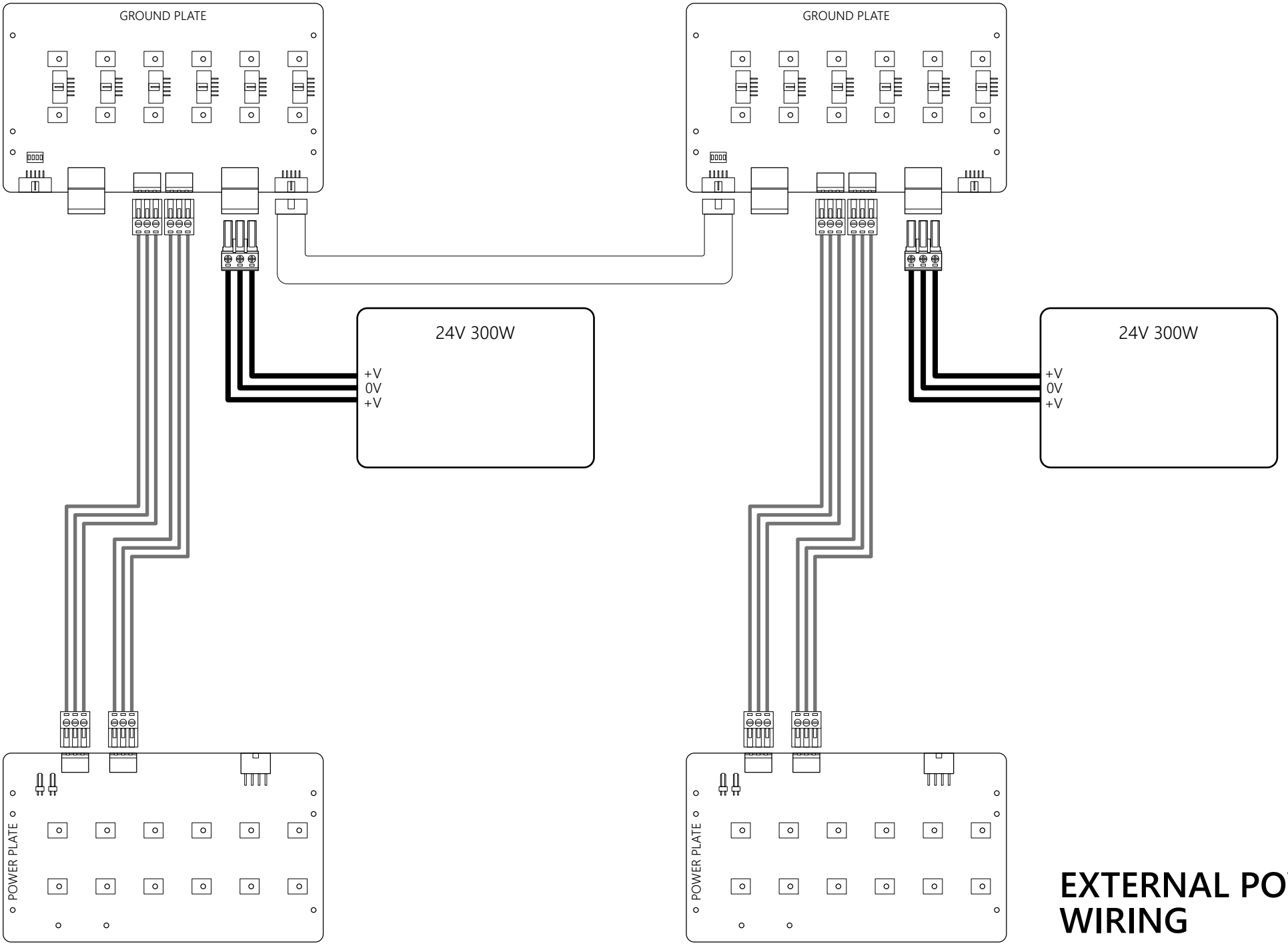

EXTERNAL POWER WIRING

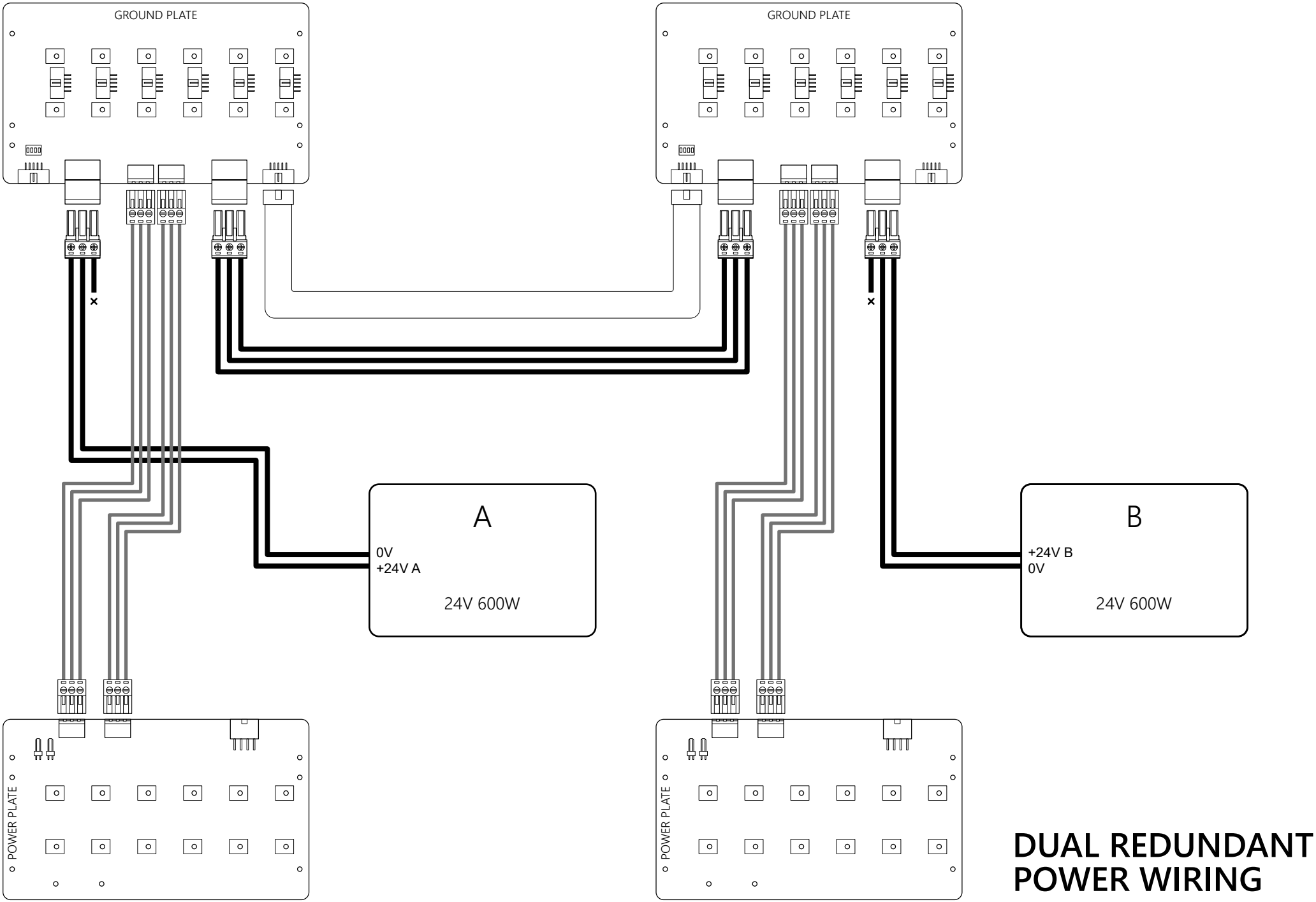

DUAL REDUNDANT POWER WIRING