BitScope SSD Backpack

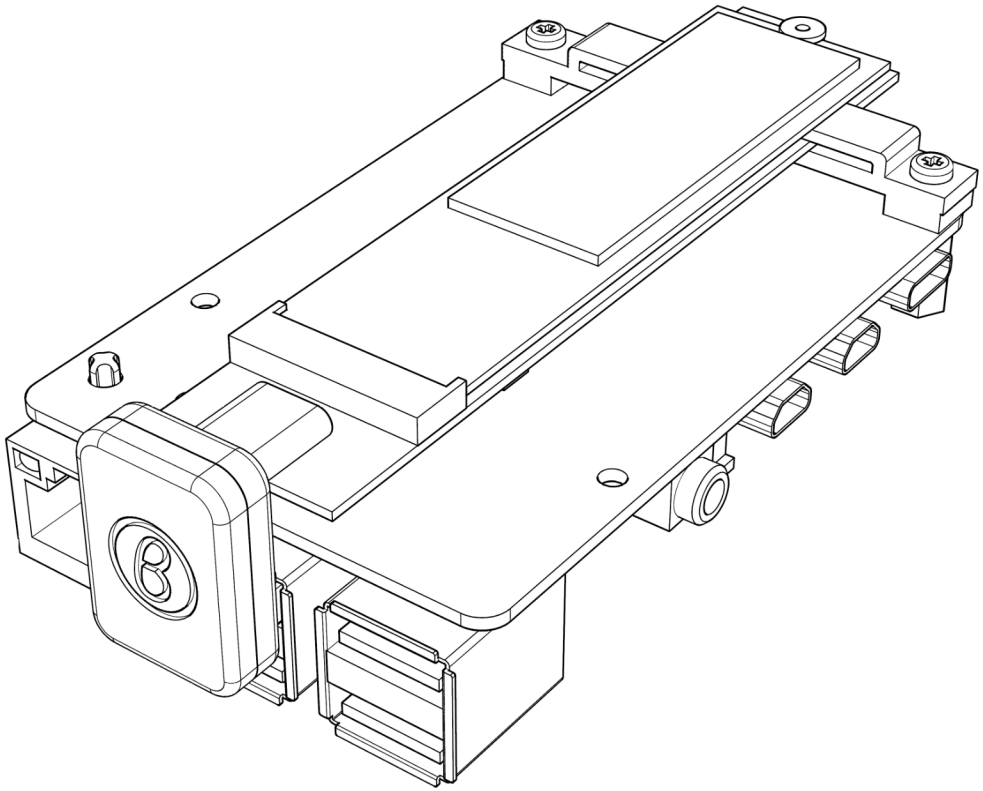

Product Assembly Guide

COMPONENTS



M2.5 4mm x 1

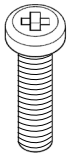

M2.5 10mm x 2

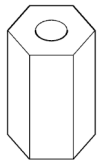

M2.5 10mm Standoff x 2
(may be supplied with cluster blade)

SSD CARRIER KIT

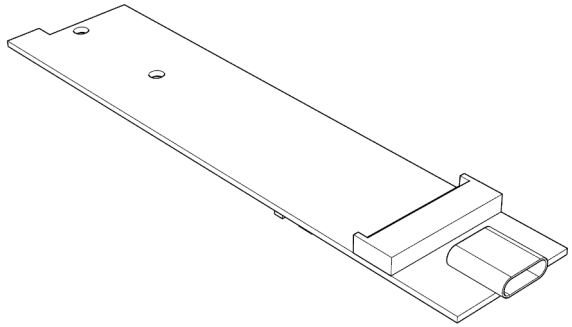



M2 3mm x 1



M2 SSD Spacer x 1

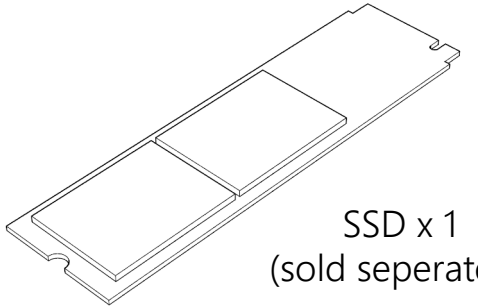

SSD x 1
(sold seperately)

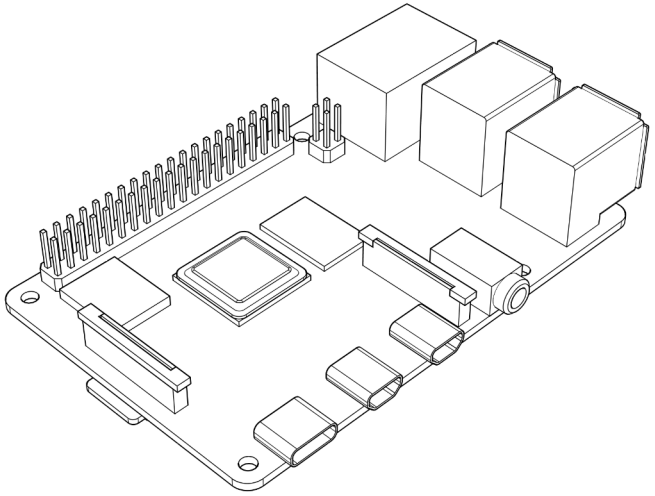

Raspberry Pi x 1
(sold seperately)

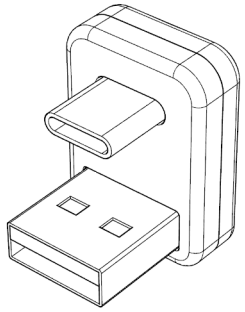

USB-C Adapter x 1

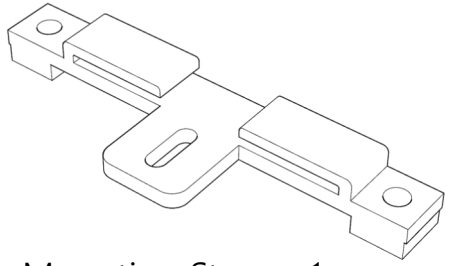

Mounting Strap x 1

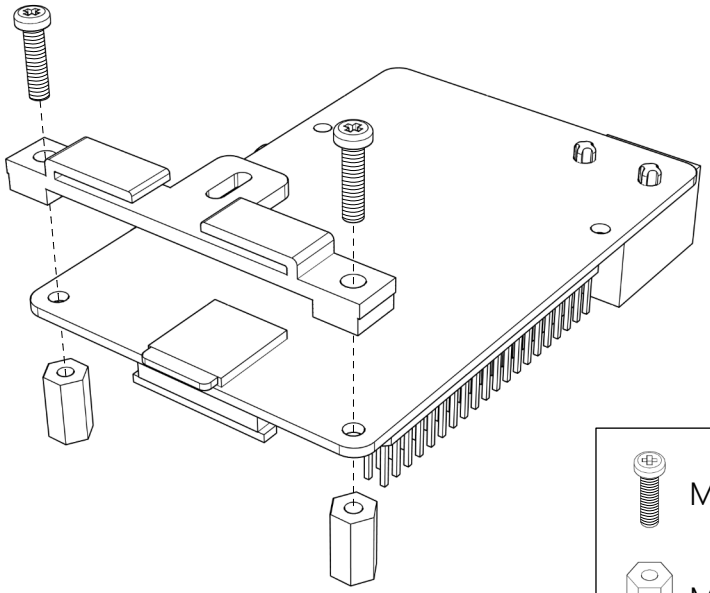

M2.5 x 2

M2.5 Standoff x 2

1

(slide carefully to avoid hitting parts on the carrier)

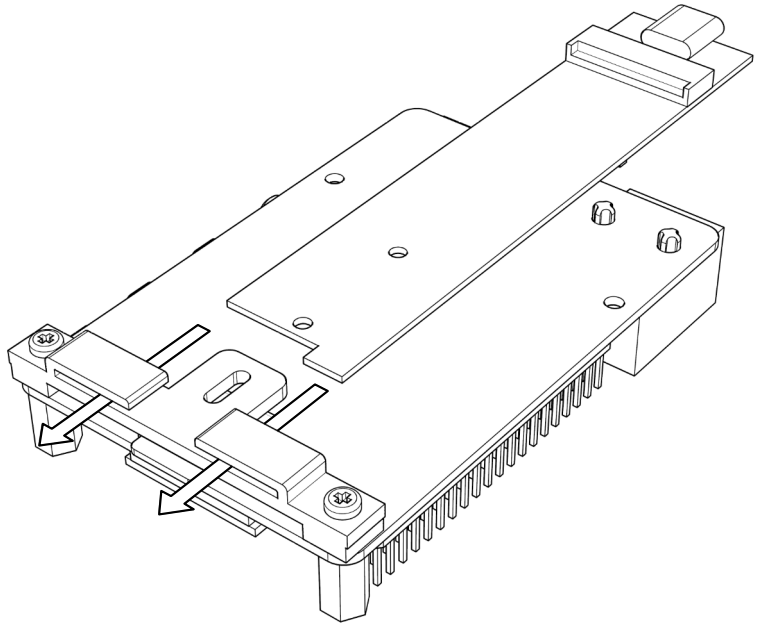

2

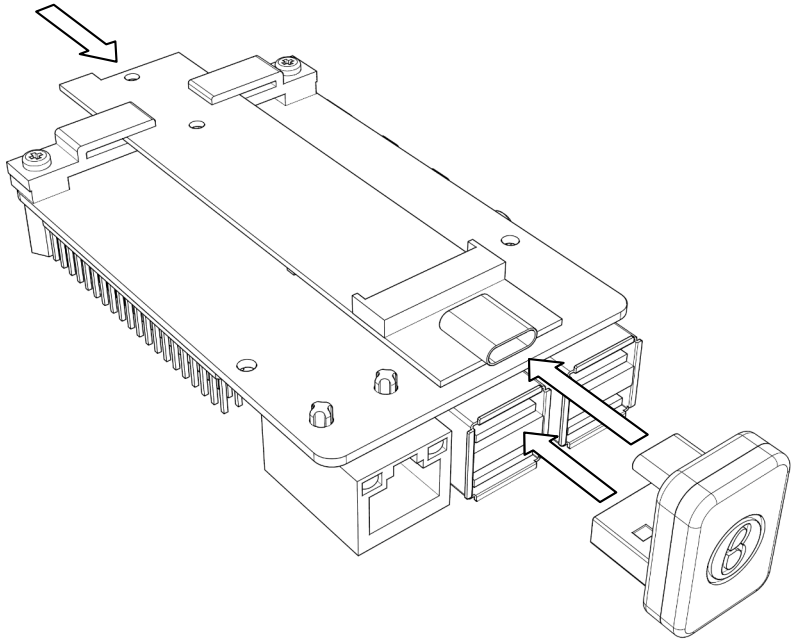

(carefully squeeze applying pressure as shown)

3

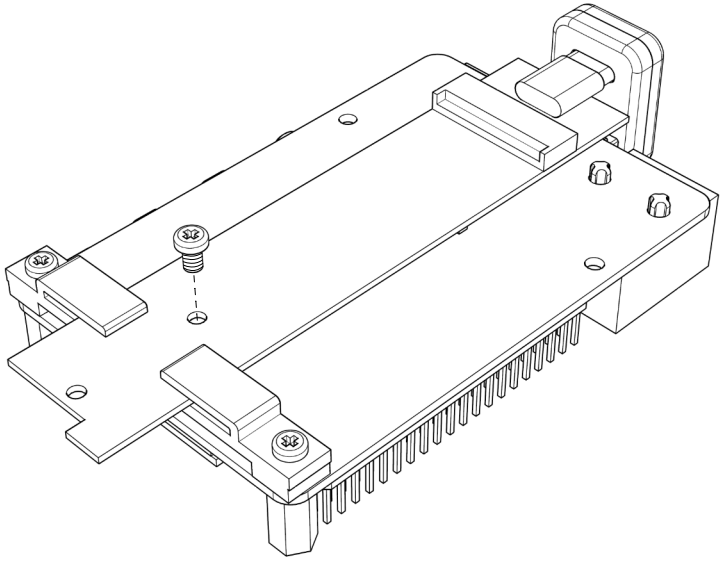

M2.5 4mm x 1

4

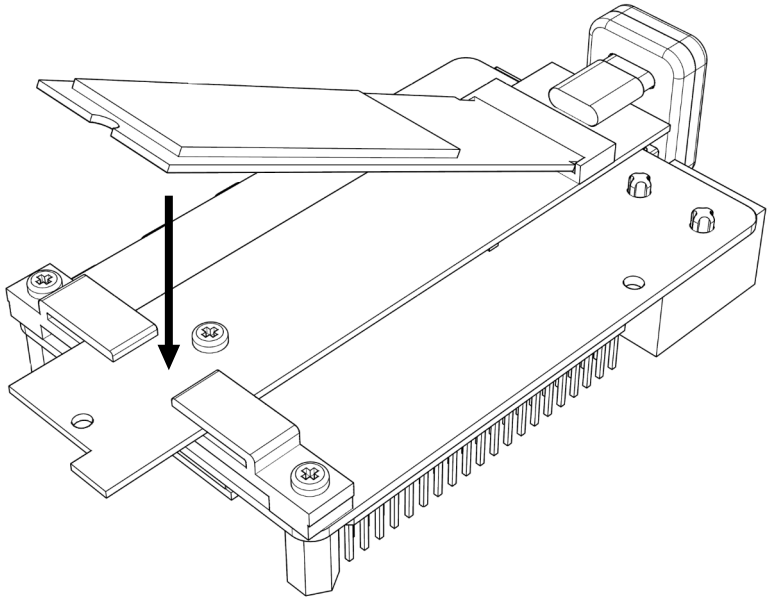

5

(ensure the "fat" part of the spacer is down)

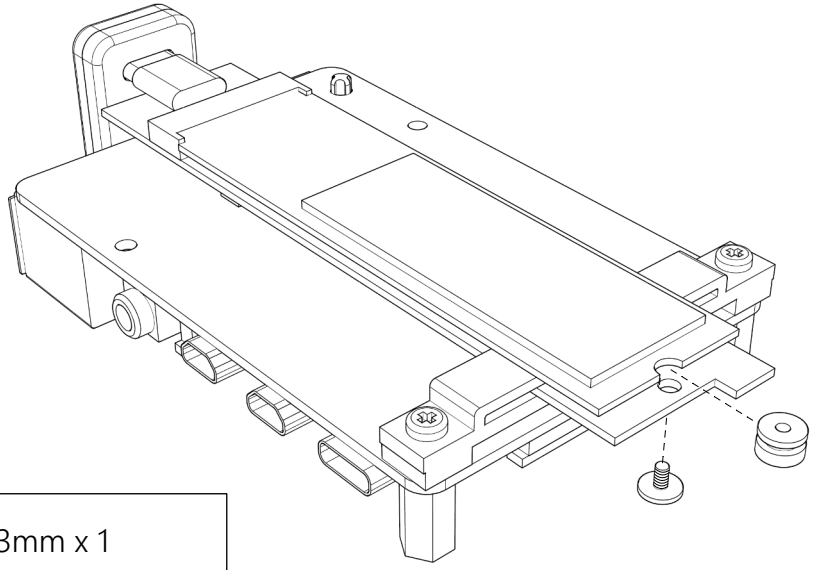

M2 3mm x 1

M2 SSD Spacer x 1

6

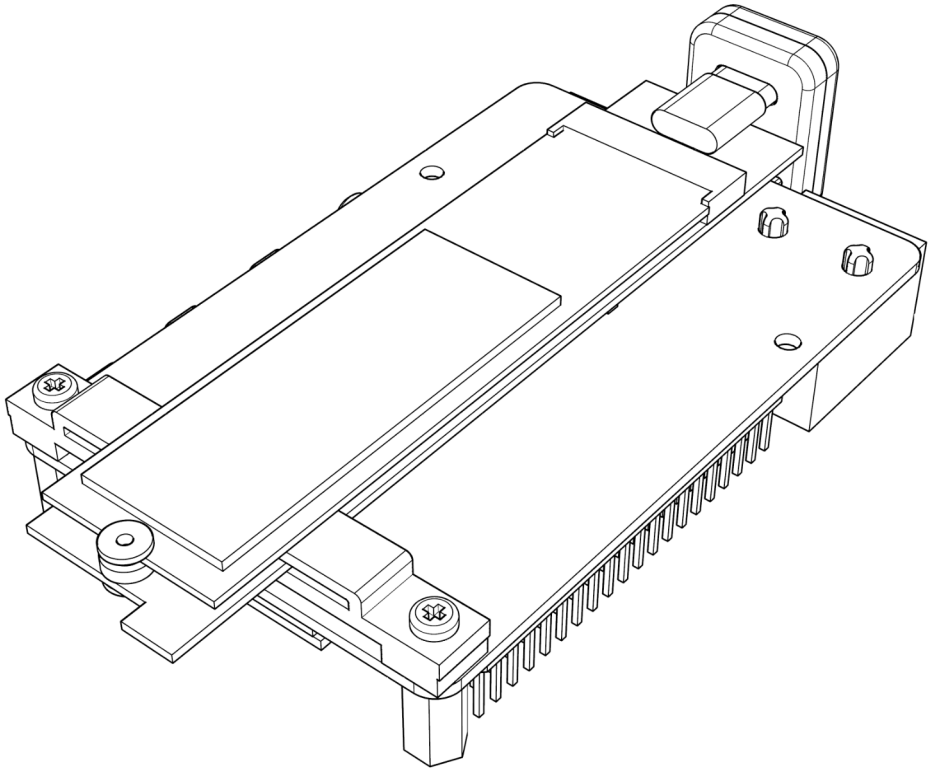

7